CONTRACTING AUTHORITY:

FUNDED BY:

هذا المشروع بدعم من

الاتحاد الأوروبي

Enabel - Belgian Development Agency

PROJECT TITLE:

The Rehabilitation of External Works at Sheikh Girls' School in Al- Sheikh Saad Village

REFERENCE #: PZA170421T-10056

Annex 1 - Drawings and Details

CONSULTANT:

ARAB ENGINEERS

المهندسون العرب

Address: Hebron- Halhul- Main Street- Natsha Building
Telefax: +970 2 2251215
Telephone: +970 2 2226361
Email: info@arabengineers-Pal.com
Website: www.arabengineers-Pal.com

27th February / 2024

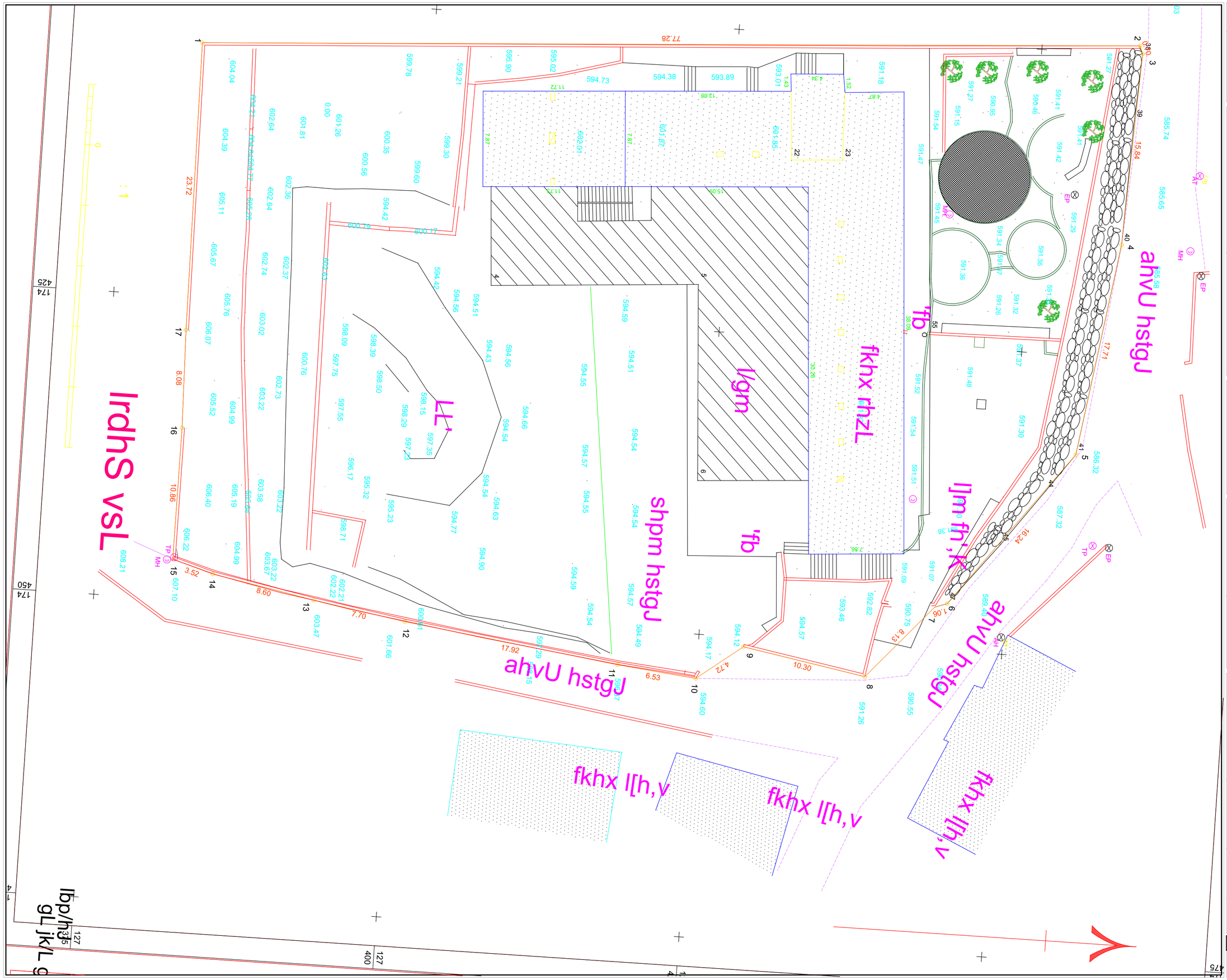

P24-2023

PROJECT TITLE:	
! fm{KŠ]K {l·l·Ř DÁN]ťă {ŎK22f 9ĚúŠNyl·f ² 2N]ă	
REFERENCE #:	###

GENERAL REMARKS:

1- All Dimension In Meters. Unless Stated Other Wise.

2- All Levels are in Meters.

3- All level in Plans, Sections & Elevations relevant to Zero Level.

4- Corridors Floor Finish is (12cm) and for Rooms is (14cm) and for Toilets (10cm).

5- Any Unclear Data Shall be Clearfied by the Supervision Engineer.

6-All Windows have Protection Guards Fence.

7-All Staircase Tiles are Non-Slip Tiles.

8-All Emergency Doors are Smoke Proof and with Automatic Closuer and (2 Hour Fire-Rated)..

LEGEND & SAMBOLS:

- Section Number
- Details No. & Sheet No.
- Finish Floor Level / Ren. Concrete Level
- Level In Plans
- Windows Number
- Door Number

	Renifocement Concrete
	Shear Walls
	Plain Concrete
	Concrete Block
	Tiles
	Stone
R.C.L	Reni. Concrete Level
F.F.L	Finish Floor Level
S.L.	Sea Level

REVISION HISTORY:

NO	DRAWINGS	DATE
REV.01	Preliminary Design	February 24
REV.02		
REV.03		
REV.04		
REV.05		
REV.06		

CONTRACTING AUTHORITY:

Enabel

Enabel - Belgian Development Agency

FUNDED BY:

Belgium
partner in development

CONSULTANT:

ARAB ENGINEERS
المهندسون العرب

Address:	Hebron- Halhul- Main Street- Natsha Building		
Telefax:	+970 2 2251215	Tel:	+970 2 2226361
Email:	info@arabengineers-Pal.com		
Website:	www.arabengineers-Pal.com		

SHEET NO.:	SHEET TITLE:
A.01	Site Survey

DESIGNER:	Arch. Malek Z. Murad
CHECKED BY:	
DRAWN BY:	Arch. Yesmain Raia

SCALE:	1:200
DATE:	27th February / 2024

Sheet (2) of (6) Sheets

P24-2023

PROJECT TITLE:

! fm{KŠλ]K {l·l·Ř DÁN]ťă {ÓK22f 9ĚúŠNyl·f ² 2N]ă

REFERENCE #:	###

GENERAL REMARKS:

1- All Dimension In Meters. Unless Stated Other Wise.

2- All Levels are in Meters.

3- All level in Plans, Sections & Elevations relevant to Zero Level.

4- Corridors Floor Finish is (12cm) and for Rooms is (14cm) and for Toilets (10cm).

5- Any Unclear Data Shall be Clearfied by the Supervision Engineer.

6-All Windows have Protection Guards Fence.

7-All Staircase Tiles are Non-Slip Tiles.

8-All Emergency Doors are Smoke Proof and with Automatic Closuer and (2 Hour Fire-Rated)..

LEGEND & SAMBOLS:

- Section Number
- Details No. & Sheet No.
- Finish Floor Level / Ren. Concrete Level
- Level In Plans
- Windows Number
- Door Number

	Renifocement Concrete
	Shear Walls
	Plain Concrete
	Concrete Block
	Tiles
	Stone
R.C.L	Reni. Concrete Level
F.F.L.	Finish Floor Level
S.L.	Sea Level

REVISION HISTORY:

NO	DRAWINGS	DATE
REV.01	Preliminary Design	February 24
REV.02		
REV.03		
REV.04		
REV.05		
REV.06		

CONTRACTING AUTHORITY:

Enabel

Enabel - Belgian Development Agency

FUNDED BY:

Belgium
partner in development

CONSULTANT:

ARAB ENGINEERS
المهندسون العرب

Address:	Hebron- Halhul- Main Street- Natsha Building		
Telefax:	+970 2 2251215	Tel:	+970 2 2226361
Email:	info@arabengineers-Pal.com		
Website:	www.arabengineers-Pal.com		

SHEET NO.:	SHEET TITLE:
A.02	Site Plan

DESIGNER:	Arch. Malek Z. Murad
CHECKED BY:	
DRAWN BY:	Arch. Yesmain Raia
SCALE:	1:200
DATE:	27th February / 2024

Sheet (3) of (6) Sheets

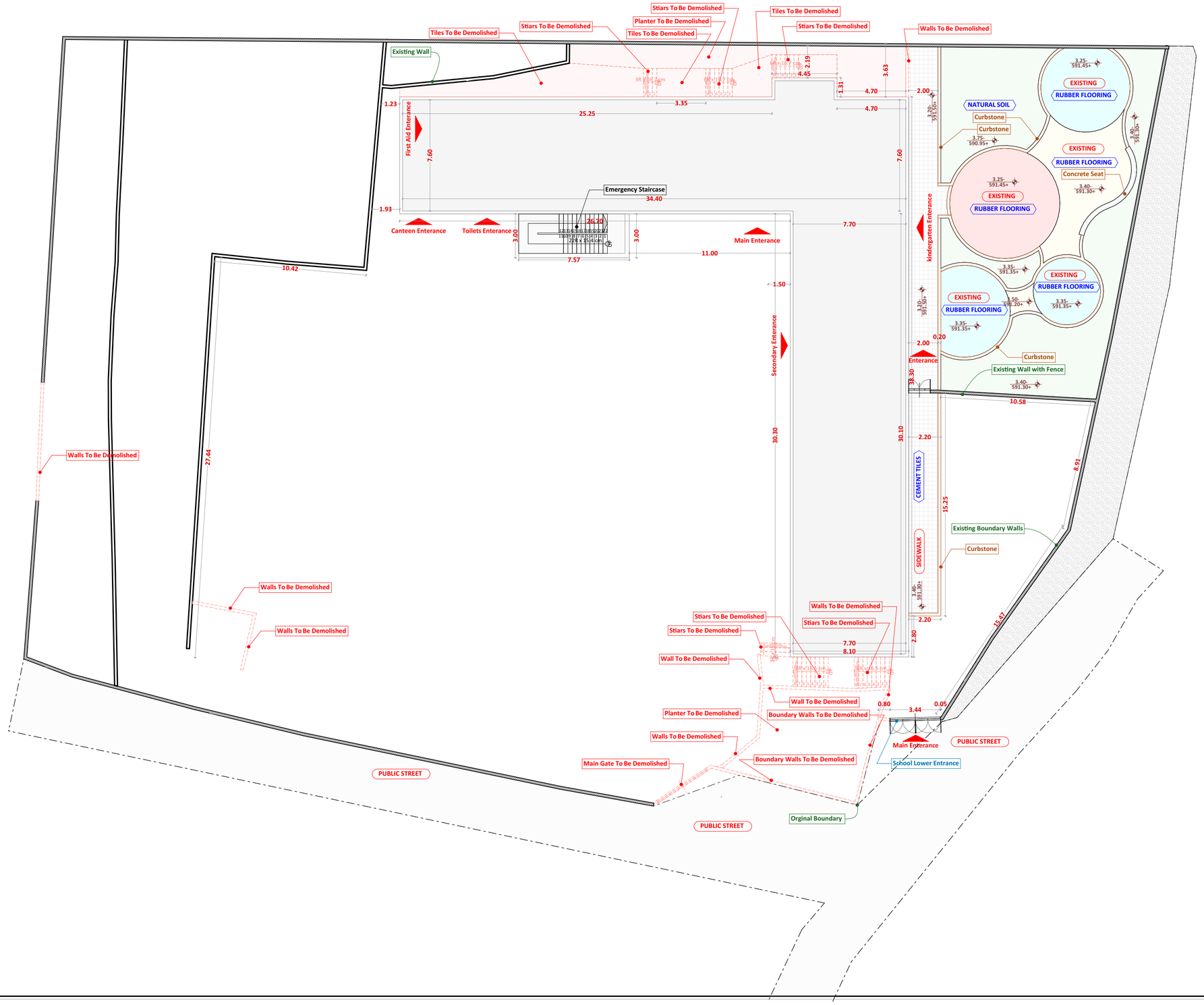

P24-2023

PROJECT TITLE:

Al-Sheikh Saad Girls School External Works

REFERENCE #:	###

GENERAL REMARKS:

1- All Dimension In Meters. Unless Stated Other Wise.

2- All Levels are in Meters.

3- All level in Plans, Sections & Elevations relevant to Zero Level.

4- Corridors Floor Finish is (12cm) and for Rooms is (14cm) and for Toilets (10cm).

5- Any Unclear Data Shall be Clearfied by the Supervision Engineer.

6-All Windows have Protection Guards Fence.

7-All Staircase Tiles are Non-Slip Tiles.

8-All Emergency Doors are Smoke Proof and with Automatic Closuer and (2 Hour Fire-Rated)..

LEGEND & SAMBOLS:

- Section Number
- Details No. & Sheet No.
- Finish Floor Level / Ren. Concrete Level
- Level In Plans
- Windows Number
- Door Number

	Renifocement Concrete
	Shear Walls
	Plain Concrete
	Concrete Block
	Tiles
	Stone
R.C.L	Reni. Concrete Level
F.F.L	Finish Floor Level
S.L	Sea Level

REVISION HISTORY:

NO	DRAWINGS	DATE
REV.01	Preliminary Design	February 24
REV.02		
REV.03		
REV.04		
REV.05		
REV.06		

CONTRACTING AUTHORITY:

Enabel

Enabel - Belgian Development Agency

FUNDED BY:

Belgium
partner in development

CONSULTANT:

ARAB ENGINEERS
المهندسون العرب

Address:	Hebron- Halhul- Main Street- Natsha Building		
Telefax:	+970 2 2251215	Tel:	+970 2 2226361
Email:	info@arabengineers-Pal.com		
Website:	www.arabengineers-Pal.com		

SHEET NO.:	SHEET TITLE:
A.03	Demolishing Plan

DESIGNER:	Arch. Malek Z. Murad
CHECKED BY:	
DRAWN BY:	Arch. Yesmain Raia

SCALE:	1:200
DATE:	27th February / 2024

Sheet (4) of (6) Sheets

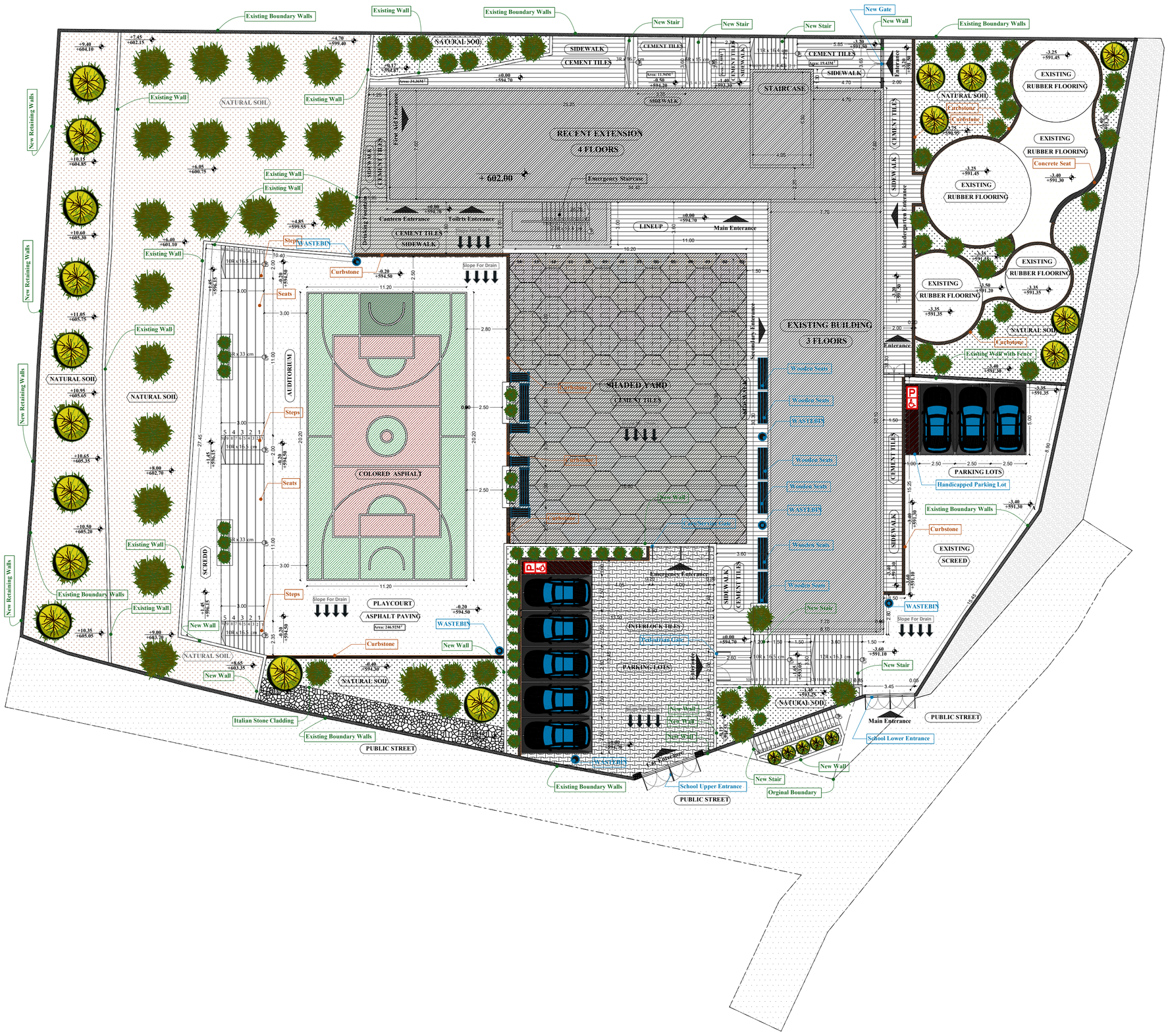

P24-2023

PROJECT TITLE:

Al-Sheikh Saad Girls School External Works

REFERENCE :#	###

GENERAL REMARKS:

-1All Dimension In Meters .Unless Stated Other Wise .

-2All Levels are in Meters .

-3All level in Plans ,Sections &Elevations relevant to Zero Level .

-4Corridors Floor Finish is 12(cm)and for Rooms is 14(cm)and for Toilets 10(cm).

-5Any Unclear Data Shall be Clearfied by the Supervision Engineer .

-6All Windows have Protection Guards Fence .

-7All Staircase Tiles are Non -Slip Tiles.

-8All Emergency Doors are Smoke Proof and with Automatic Closuer and 2(Hour Fire-Rated)..

LEGEND &SAMBOLS:

- Section Number
- Details No & .Sheet No.
- Finish Floor Level
- Ren .Concrete Level
- Level In Plans
- Windows Number
- Door Number

	Reinfocement Concrete
	Shear Walls
	Plain Concrete
	Concrete Block
	Tiles
	Stone
R.C.L	Reni. Concrete Level
F.F.L	Finish Floor Level
S.L	Sea Level

REVISION HISTORY :

NO	DRAWINGS	DATE
REV01.		
REV02.		
REV03.		
REV04.		
REV05.		
REV06.		

CONTRACTING AUTHORITY :

Enabel -Belgian Development Agency

FUNDED BY:

Belgium
partner in development

CONSULTANT:

ARAB ENGINEERS
المهندسون العرب

Address :	Hebron -Halhul -Main Street -Natsha Building		
Telefax :	+970 2 2251215	Tel:	+970 2 2226361
Email :	info@arabengineers -Pal.com		
Website :	www.arabengineers-Pal.com		

SHEET NO.:	SHEET TITLE:
SD - 01	**Site Plan**

DESIGNER:	Ahmed Salameh
CHECKED BY:	Jamal Salameh
DRAWN BY:	Ahmed Tomizeh

SCALE:	1:200
DATE:	2024 - 02

Sheet(01) of (22) Sheets

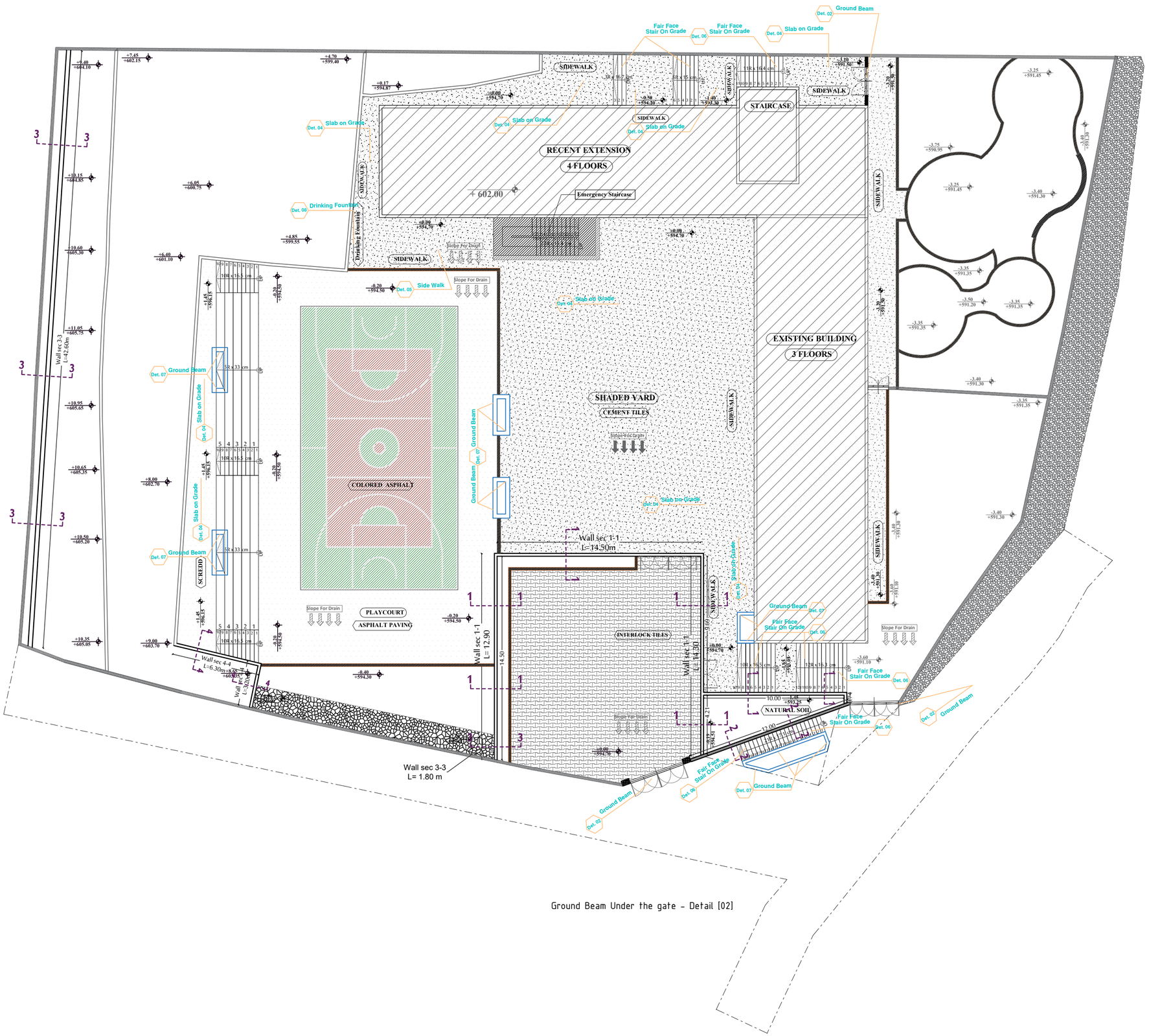

Ground Beam Under the gate - Detail [02]

P24-2023

PROJECT TITLE:

Al-Sheikh Saad Girls School External Works

REFERENCE :# ###

GENERAL REMARKS:

-1All Dimension In Meters .Unless Stated Other Wise .

-2All Levels are in Meters .

-3All level in Plans ,Sections &Elevations relevant to Zero Level .

-4Corridors Floor Finish is 12(cm)and for Rooms is 14(cm)and for Toilets 10(cm).

-5Any Unclear Data Shall be Clearfied by the Supervision Engineer .

-6All Windows have Protection Guards Fence .

-7All Staircase Tiles are Non -Slip Tiles.

-8All Emergency Doors are Smoke Proof and with Automatic Closuer and 2(Hour Fire-Rated)..

LEGEND &SAMBOLS:

- Section Number
- Details No & .Sheet No.
- Finish Floor Level
- Ren .Concrete Level
- Level In Plans
- Windows Number
- Door Number

	Reinfocement Concrete
	Shear Walls
	Plain Concrete
	Concrete Block
	Tiles
	Stone
R.C.L	Reni. Concrete Level
F.F.L	Finish Floor Level
S.L	Sea Level

REVISION HISTORY :

NO	DRAWINGS	DATE
REV01.		
REV02.		
REV03.		
REV04.		
REV05.		
REV06.		

CONTRACTING AUTHORITY :

Enabel -Belgian Development Agency

FUNDED BY:

Belgium partner in development

CONSULTANT:

ARAB ENGINEERS المهندسون العرب

Address :	Hebron -Halhul -Main Street -Natsha Building		
Telefax :	+970 2 2251215	Tel:	+970 2 2226361
Email :	info@arabengineers-Pal.com		
Website :	www.arabengineers-Pal.com		

SHEET NO.:	SHEET TITLE:
SD - 02	**Site Plan**

DESIGNER:	Ahmed Salameh
CHECKED BY:	Jamal Salameh
DRAWN BY:	Ahmed Tomizeh
SCALE:	1:200
DATE:	2024 - 02

Sheet(02) of (22) Sheets

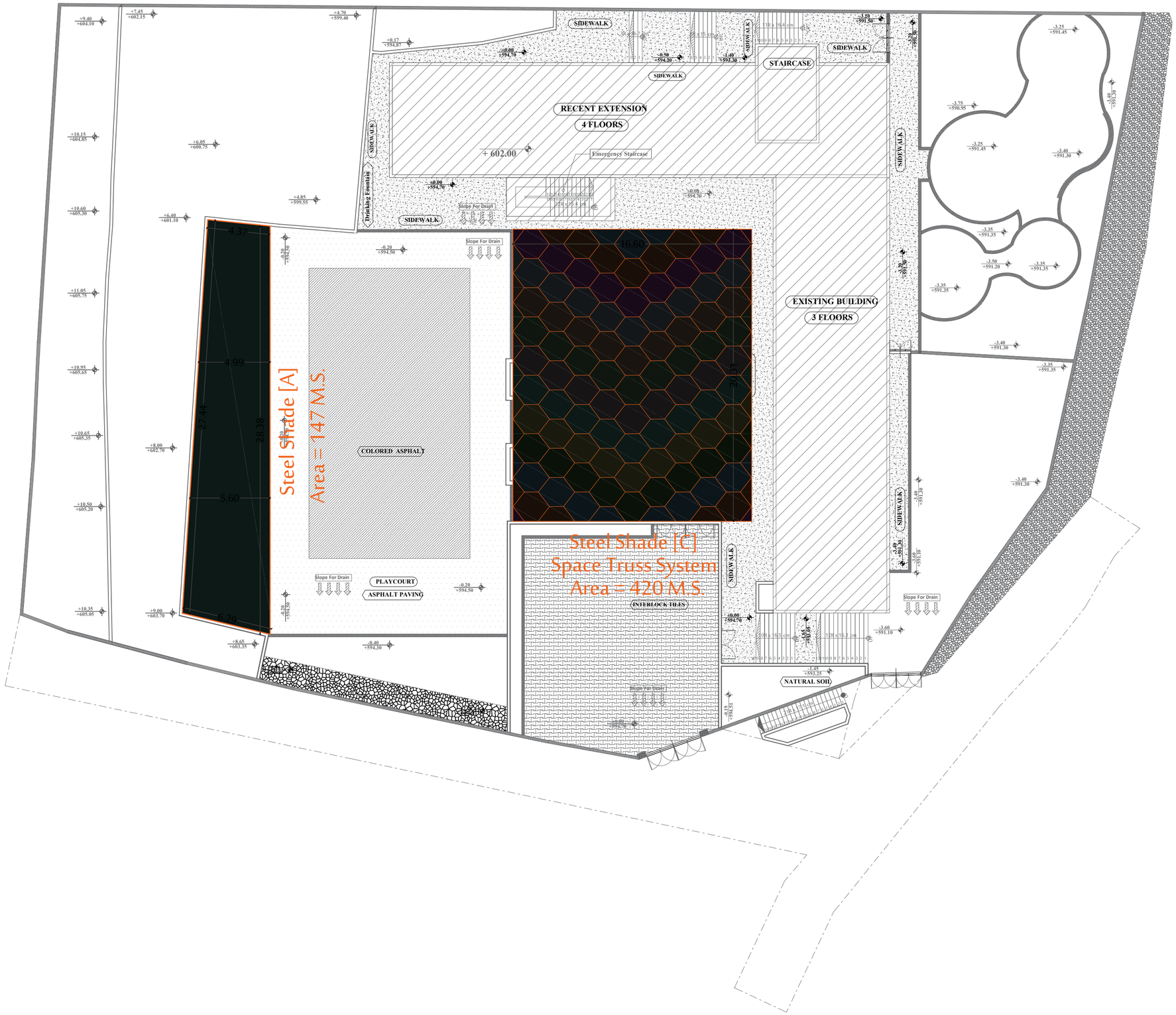

P24-2023

PROJECT TITLE:

Al-Sheikh Saad Girls School External Works

REFERENCE :#	###

GENERAL REMARKS:

-1All Dimension In Meters .Unless Stated Other Wise .

-2All Levels are in Meters .

-3All level in Plans ,Sections &Elevations relevant to Zero Level .

-4Corridors Floor Finish is 12(cm)and for Rooms is 14(cm)and for Toilets 10(cm).

-5Any Unclear Data Shall be Clearfied by the Supervision Engineer .

-6All Windows have Protection Guards Fence .

-7All Staircase Tiles are Non -Slip Tiles.

-8All Emergency Doors are Smoke Proof and with Automatic Closuer and 2(Hour Fire-Rated)..

LEGEND &SAMBOLS:

- Section Number
- Details No & .Sheet No.
- Finish Floor Level
- Ren .Concrete Level
- Level In Plans
- Windows Number
- Door Number

	Reinfocement Concrete
	Shear Walls
	Plain Concrete
	Concrete Block
	Tiles
	Stone
R.C.L	Reni. Concrete Level
F.F.L	Finish Floor Level
S.L	Sea Level

REVISION HISTORY :

NO	DRAWINGS	DATE
REV01.		
REV02.		
REV03.		
REV04.		
REV05.		
REV06.		

CONTRACTING AUTHORITY :

Enabel -Belgian Development Agency

FUNDED BY:

Belgium
partner in development

CONSULTANT:

ARAB ENGINEERS
المهندسون العرب

Address :	Hebron -Halhul -Main Street -Natsha Building		
Telefax :	+970 2 2251215	Tel:	+970 2 2226361
Email :	info@arabengineers-Pal.com		
Website :	www.arabengineers-Pal.com		

SHEET NO.:	SHEET TITLE:
SD - 03	**External Works Shaded Zones**

DESIGNER:	Ahmed Salameh
CHECKED BY:	Jamal Salameh
DRAWN BY:	Ahmed Tomizeh

SCALE:	1:200
DATE:	2024 - 02

Sheet(03) of (22) Sheets

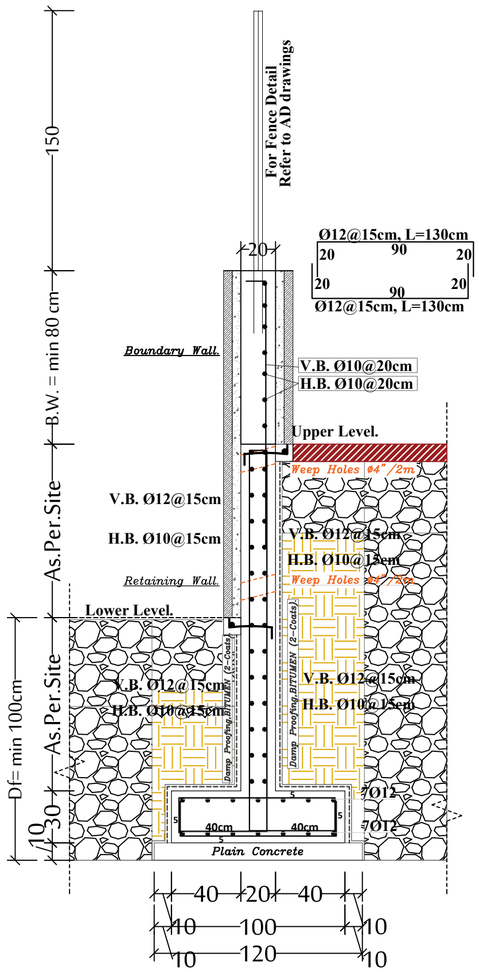

Wall Section [1-1]

Scale: 1-25

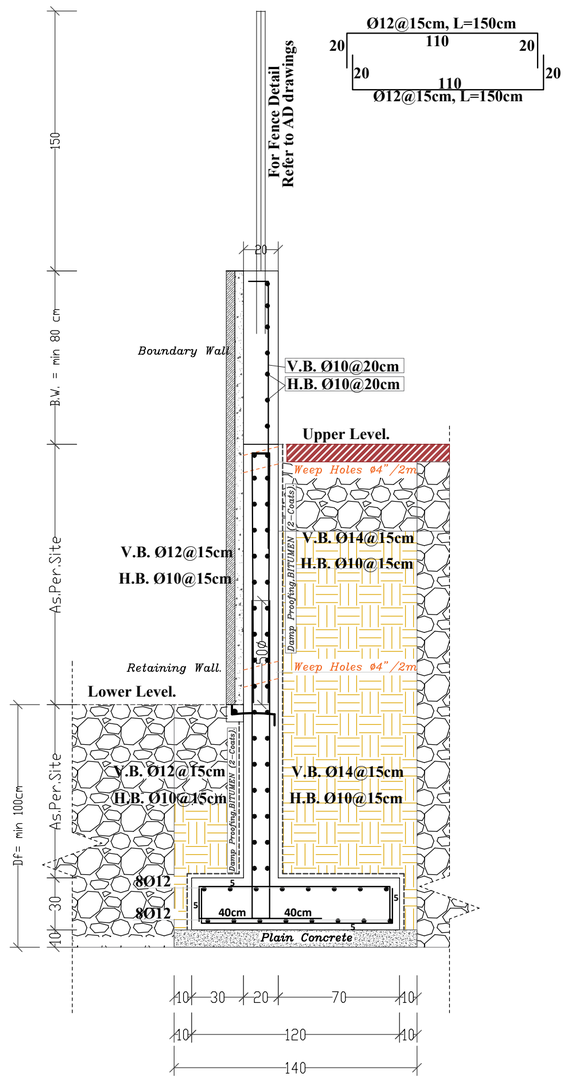

Wall Section [2-2]

Scale: 1-25

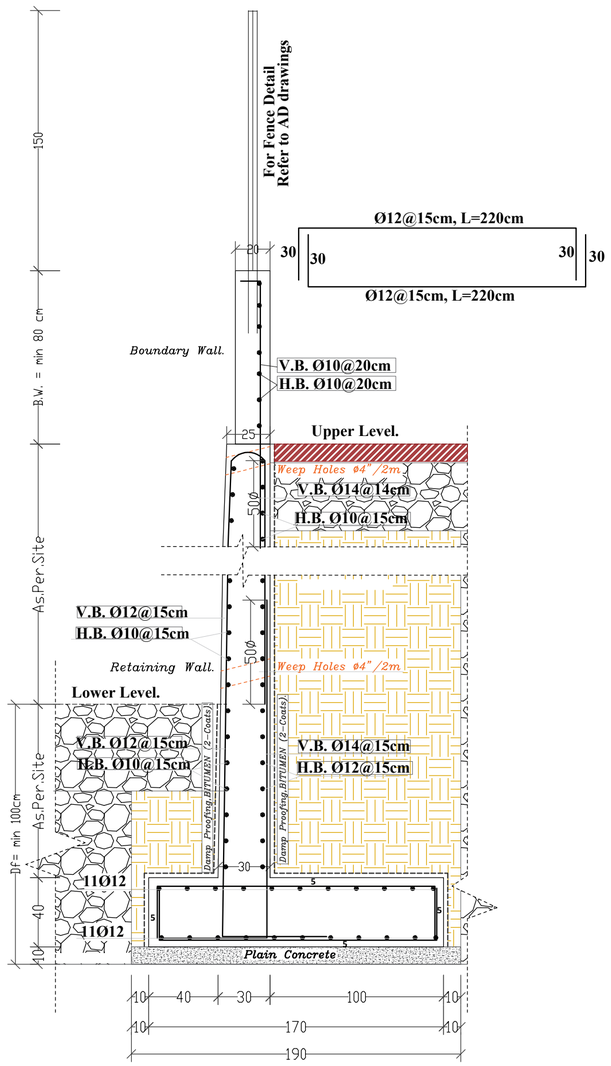

Wall Section [3-3]

Scale: 1-25

P24-2023

PROJECT TITLE:

Al-Sheikh Saad Girls School External Works

REFERENCE :#	###

GENERAL REMARKS:

-1All Dimension In Meters .Unless Stated Other Wise .

-2All Levels are in Meters .

-3All level in Plans ,Sections &Elevations relevant to Zero Level .

-4Corridors Floor Finish is 12(cm)and for Rooms is 14(cm)and for Toilets 10(cm).

-5Any Unclear Data Shall be Clearfied by the Supervision Engineer .

-6All Windows have Protection Guards Fence .

-7All Staircase Tiles are Non -Slip Tiles.

-8All Emergency Doors are Smoke Proof and with Automatic Closuer and 2(Hour Fire-Rated)..

LEGEND &SAMBOLS:

Section Number
Details No & .Sheet No.
Finish Floor Level
Ren .Concrete Level
Level In Plans
Windows Number
Door Number

	Renifocement Concrete
	Shear Walls
	Plain Concrete
	Concrete Block
	Tiles
	Stone
R.C.L	Reni. Concrete Level
F.F.L.	Finish Floor Level
S.L.	Sea Level

REVISION HISTORY :

NO	DRAWINGS	DATE
REV01.		
REV02.		
REV03.		
REV04.		
REV05.		
REV06.		

CONTRACTING AUTHORITY :

Enabel -Belgian Development Agency

FUNDED BY:

Belgium
partner in development

CONSULTANT:

ARAB ENGINEERS
المهندسون العرب

Address :	Hebron -Halhul -Main Street -Natsha Building		
Telefax :	+970 2 2251215	Tel:	+970 2 2226361
Email :	info@arabengineers-Pal.com		
Website :	www.arabengineers-Pal.com		

SHEET NO.:	SHEET TITLE:
SD - 04	External Works Wall Sections

DESIGNER:	Ahmed Salameh
CHECKED BY:	Jamal Salameh
DRAWN BY:	Ahmed Tomizeh
SCALE:	1:200
DATE:	2024 - 02

Sheet(04) of (22) Sheets

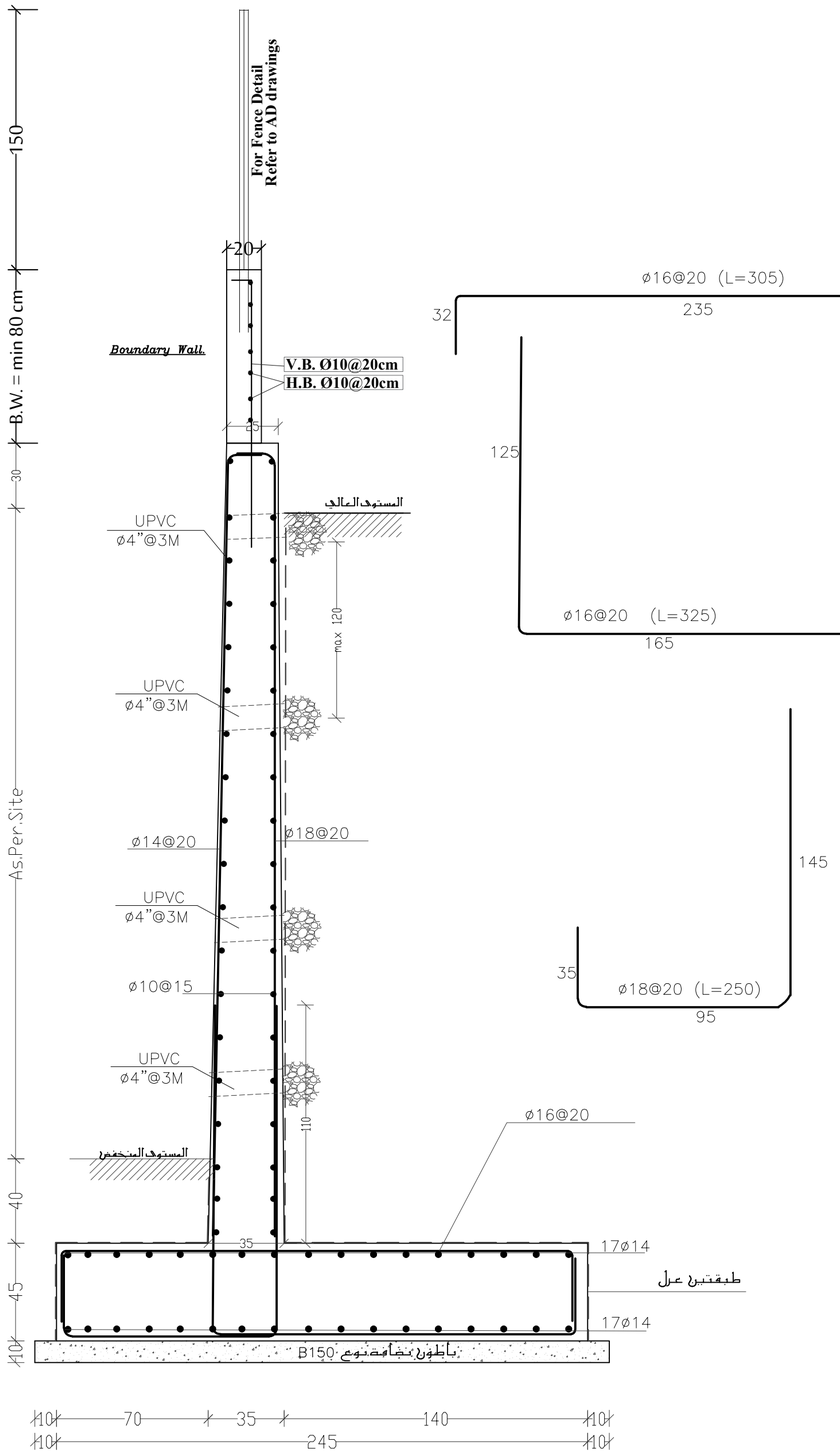

Wall Section [4-4]

Scale: 1-20

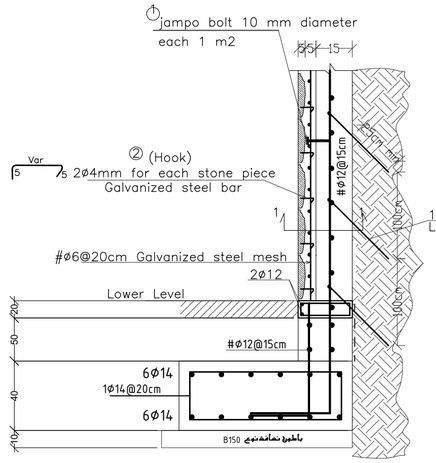

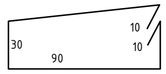

1ø14@20cm
L = 260cm

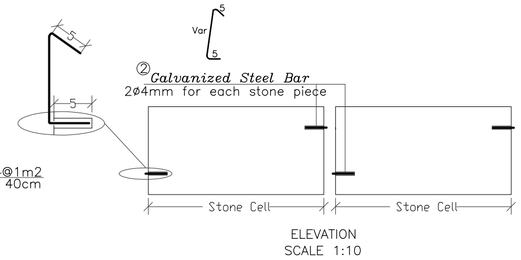

ELEVATION
SCALE 1:10

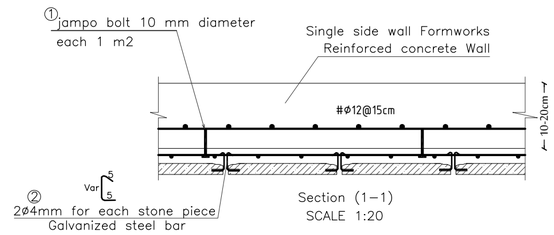

Section (1–1)
SCALE 1:20

يتم تهذيب القطع الصخري بدايتا كما ورد في بند تسوية الموقع
وبناء على تعليمات المهندس المشرف بحيث لا يتضرر الجدار القائم العلوي
بحيث يتم التجهير لبناء جدار طوبار من جهة واحدة فقط على أن تتم
تلبيسه بالحجر الايطالي حيث تتراوح سماكة الجدار من ١٠-٢٠ سم
قبل البدء بصب الجدار يجب تثبيت حديد التسليح الخاص بالجدار
بالقطع الصخري المهذب باستخدام حديد قطر ١٤ ملم كل واحد متر بالاتجاهين
يتم القدح بحيث يخترق القضيب على الأقل ٢٥ سم وبزاوية ٤٥ درجة

تفاصيل تلبيس الحجر الطلياني للجدار عند البوابة الرئيسية

Italian Stone Cladding Structural Detail.

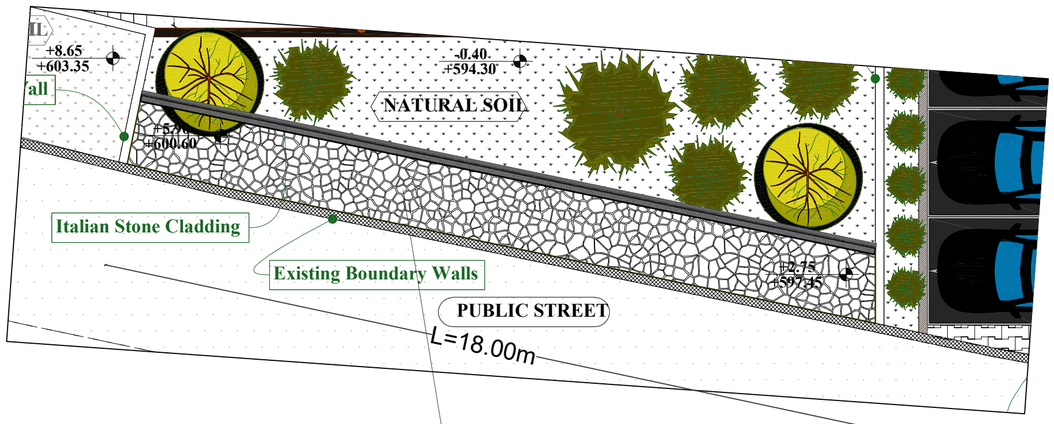

تلبيس الحجر الايطالي للجدار عند البوابة الرئيسية

P24-2023

PROJECT TITLE:

Al-Sheikh Saad Girls School External Works

REFERENCE :#	###

GENERAL REMARKS:

-1All Dimension In Meters .Unless Stated Other Wise .

-2All Levels are in Meters .

-3All level in Plans ,Sections &Elevations relevant to Zero Level .

-4Corridors Floor Finish is 12(cm)and for Rooms is 14(cm)and for Toilets 10(cm).

-5Any Unclear Data Shall be Clearfied by the Supervision Engineer .

-6All Windows have Protection Guards Fence .

-7All Staircase Tiles are Non -Slip Tiles.

-8All Emergency Doors are Smoke Proof and with Automatic Closuer and 2(Hour Fire-Rated)..

LEGEND &SAMBOLS:

Section Number
Details No & .Sheet No.
Finish Floor Level
Ren .Concrete Level
Level In Plans
Windows Number
Door Number

	Reinfocement Concrete
	Shear Walls
	Plain Concrete
	Concrete Block
	Tiles
	Stone
R.C.L	Reni. Concrete Level
F.F.L	Finish Floor Level
S.L	Sea Level

REVISION HISTORY :

NO	DRAWINGS	DATE
REV01.		
REV02.		
REV03.		
REV04.		
REV05.		
REV06.		

CONTRACTING AUTHORITY :

Enabel -Belgian Development Agency

FUNDED BY:

Belgium
partner in development

CONSULTANT:

ARAB ENGINEERS
المهندسون العرب

Address :	Hebron -Halhul -Main Street -Natsha Building		
Telefax :	+970 2 2251215	Tel:	+970 2 2226361
Email :	info@arabengineers-Pal.com		
Website :	www.arabengineers-Pal.com		

SHEET NO.:	SHEET TITLE:
SD - 05	External Works Wall Sections Cladding Details

DESIGNER:	Ahmed Salameh
CHECKED BY:	Jamal Salameh
DRAWN BY:	Ahmed Tomizeh
SCALE:	1:200
DATE:	2024 - 02

Sheet(05) of (22) Sheets

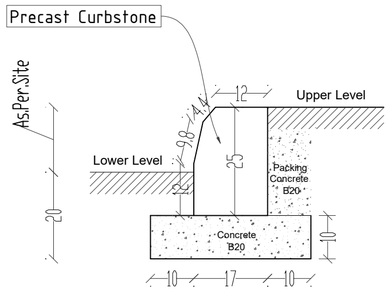

Curbstone - Detail [01]

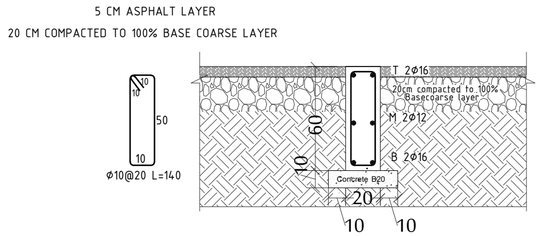

Ground Beam Under the gate - Detail [02]

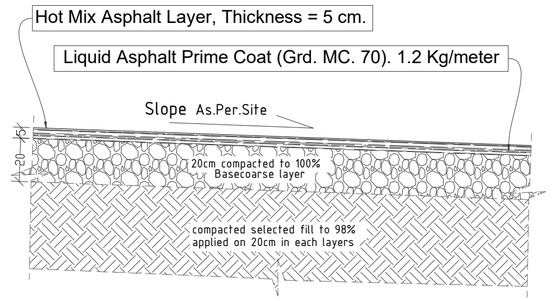

Typical Section in Asphalt - Detail [03]

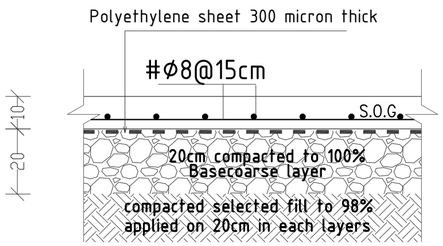

Slab on Grade 10cm thick

Detail [04]

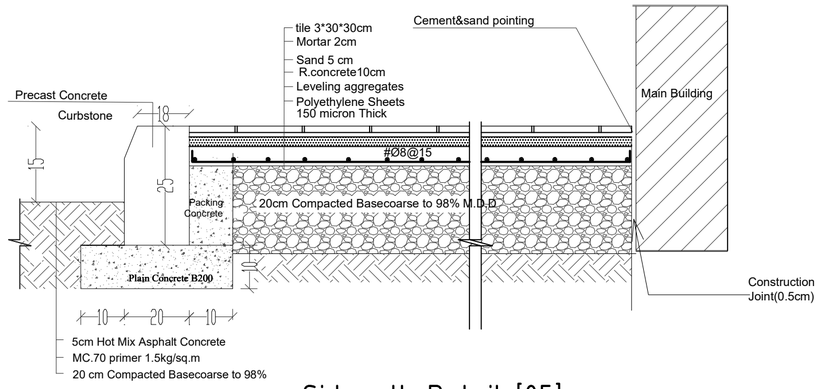

Sidewalk Detail [05]

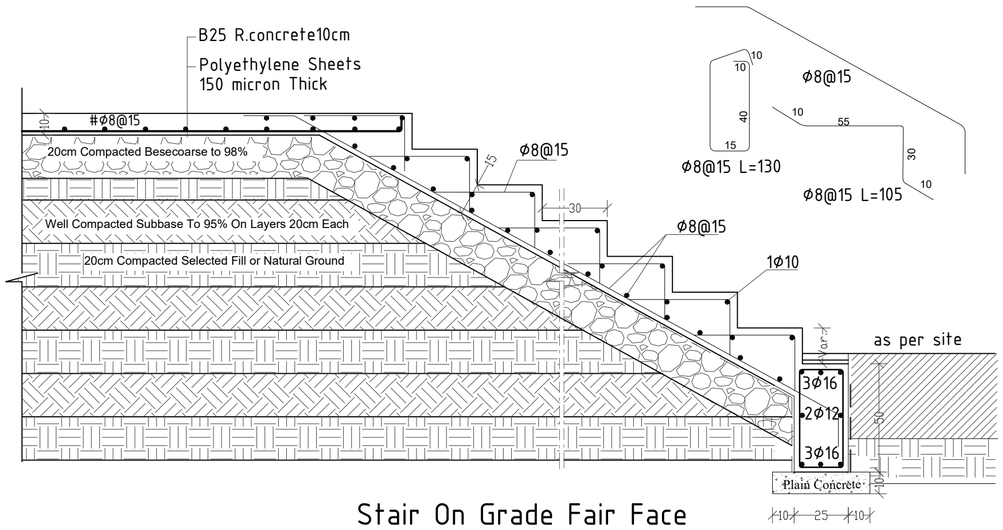

Stair On Grade Fair Face

Detail [06]

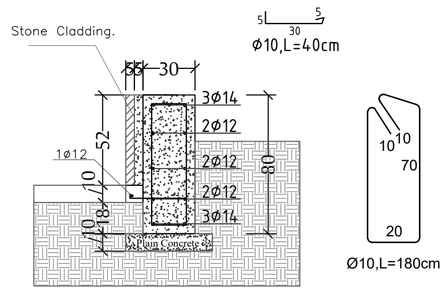

Ground Beam

Detail [07]

P24-2023

PROJECT TITLE:

Al-Sheikh Saad Girls School External Works

REFERENCE :# ###

GENERAL REMARKS:

-1All Dimension In Meters .Unless Stated Other Wise .

-2All Levels are in Meters .

-3All level in Plans ,Sections &Elevations relevant to Zero Level .

-4Corridors Floor Finish is 12(cm)and for Rooms is 14(cm)and for Toilets 10(cm).

-5Any Unclear Data Shall be Clearfied by the Supervision Engineer .

-6All Windows have Protection Guards Fence .

-7All Staircase Tiles are Non -Slip Tiles.

-8All Emergency Doors are Smoke Proof and with Automatic Closuer and 2(Hour Fire-Rated)..

LEGEND &SAMBOLS:

Section Number
Details No & .Sheet No.
Finish Floor Level
Ren .Concrete Level
Level In Plans
Windows Number
Door Number

	Renifocement Concrete
	Shear Walls
	Plain Concrete
	Concrete Block
	Tiles
	Stone
R.C.L	Reni. Concrete Level
F.F.L	Finish Floor Level
S.L	Sea Level

REVISION HISTORY :

NO	DRAWINGS	DATE
REV01.		
REV02.		
REV03.		
REV04.		
REV05.		
REV06.		

CONTRACTING AUTHORITY :

Enabel -Belgian Development Agency

FUNDED BY:

Belgium partner in development

CONSULTANT:

ARAB ENGINEERS المهندسون العرب

Address :	Hebron -Halhul -Main Street -Natsha Building		
Telefax :	+970 2 2251215	Tel:	+970 2 2226361
Email :	info@arabengineers-Pal.com		
Website :	www.arabengineers-Pal.com		

SHEET NO.:	SHEET TITLE:
SD - 06	External Works STR .Details

DESIGNER:	Ahmed Salameh
CHECKED BY:	Jamal Salameh
DRAWN BY:	Ahmed Tomizeh

SCALE:	1:200
DATE:	2024 - 02

Sheet(06) of (22) Sheets

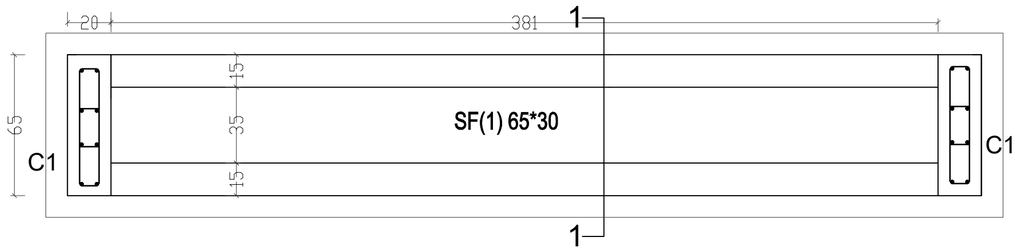

Strip Footing Plan For Drinking Fountain
Scale 1/20

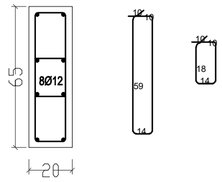

Section in Column C1
Scale 1/20

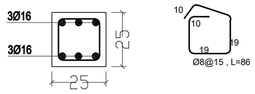

SECTION 1/1 IN BEAM B(1),25/25
1:20

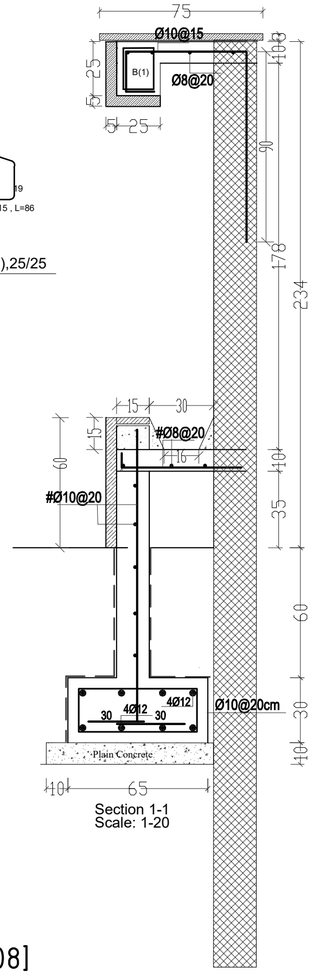

Section 1-1
Scale: 1-20

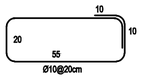

Drinking Fountain - Detail [08]

P24-2023

PROJECT TITLE:

Al-Sheikh Saad Girls School External Works

REFERENCE :#	###

GENERAL REMARKS:

-1All Dimension In Meters .Unless Stated Other Wise .

-2All Levels are in Meters .

-3All level in Plans ,Sections &Elevations relevant to Zero Level .

-4Corridors Floor Finish is 12(cm)and for Rooms is 14(cm)and for Toilets 10(cm).

-5Any Unclear Data Shall be Clearfied by the Supervision Engineer .

-6All Windows have Protection Guards Fence .

-7All Staircase Tiles are Non -Slip Tiles.

-8All Emergency Doors are Smoke Proof and with Automatic Closuer and 2(Hour Fire-Rated)..

LEGEND &SAMBOLS:

Section Number
Details No & .Sheet No.
Finish Floor Level
Ren .Concrete Level
Level In Plans
Windows Number
Door Number

	Renifocement Concrete
	Shear Walls
	Plain Concrete
	Concrete Block
	Tiles
	Stone
R.C.L	Reni. Concrete Level
F.F.L.	Finish Floor Level
S.L.	Sea Level

REVISION HISTORY :

NO	DRAWINGS	DATE
REV01.		
REV02.		
REV03.		
REV04.		
REV05.		
REV06.		

CONTRACTING AUTHORITY :

Enabel -Belgian Development Agency

FUNDED BY:

Belgium
partner in development

CONSULTANT:

ARAB ENGINEERS
المهندسون العرب

Address :	Hebron -Halhul -Main Street -Natsha Building		
Telefax :	+970 2 2251215	Tel:	+970 2 2226361
Email :	info@arabengineers-Pal.com		
Website :	www.arabengineers-Pal.com		

SHEET NO.:	SHEET TITLE:
SD - 07	External Works STR .Details

DESIGNER:	Ahmed Salameh
CHECKED BY:	Jamal Salameh
DRAWN BY:	Ahmed Tomizeh

SCALE:	1:200
DATE:	2024 - 02

Sheet(07) of (22) Sheets

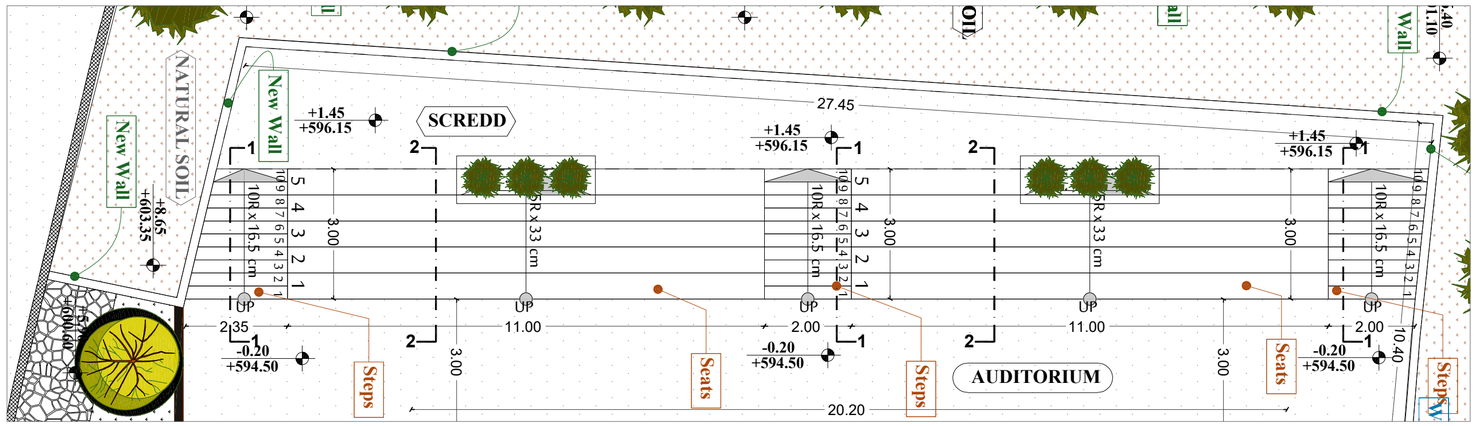

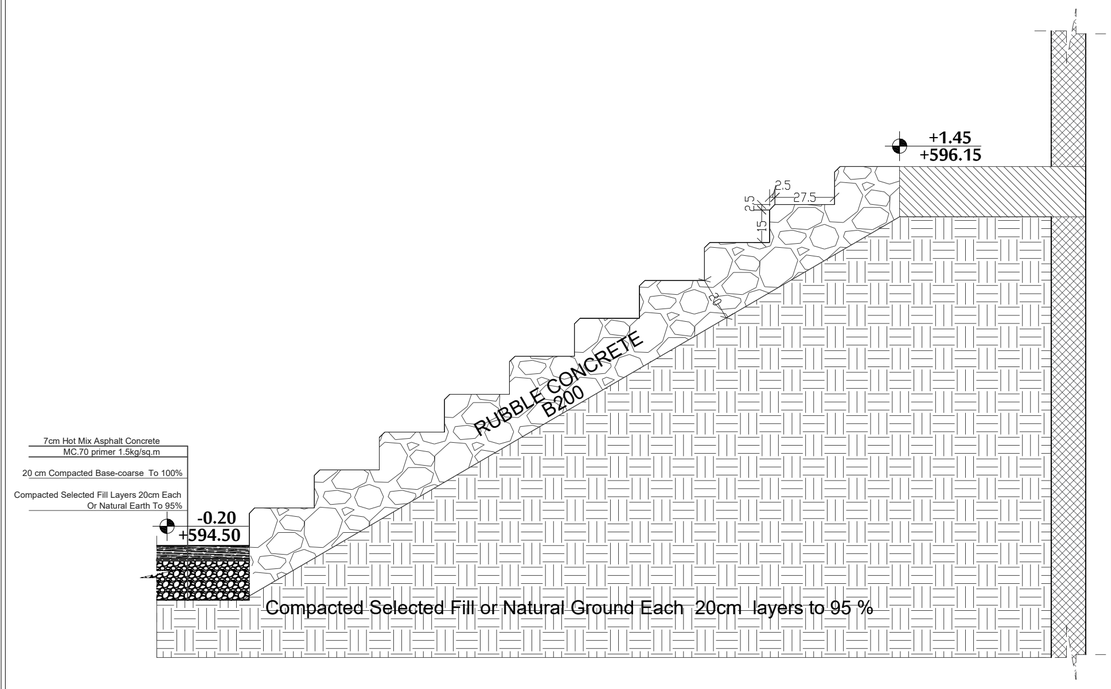

Section 1-1 In External Seating

1:20

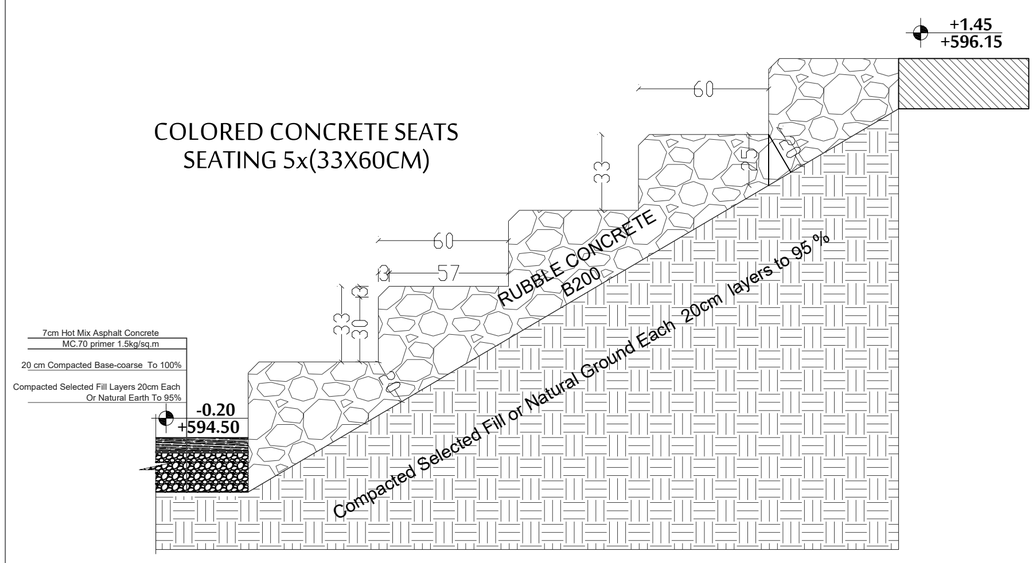

Section 2-2 In External Seating

1:20

P24-2023

PROJECT TITLE:

Al-Sheikh Saad Girls School External Works

REFERENCE :#	###

GENERAL REMARKS:

-1All Dimension In Meters .Unless Stated Other Wise .

-2All Levels are in Meters .

-3All level in Plans ,Sections &Elevations relevant to Zero Level .

-4Corridors Floor Finish is 12(cm)and for Rooms is 14(cm)and for Toilets 10(cm).

-5Any Unclear Data Shall be Clearfied by the Supervision Engineer .

-6All Windows have Protection Guards Fence .

-7All Staircase Tiles are Non -Slip Tiles.

-8All Emergency Doors are Smoke Proof and with Automatic Closuer and 2(Hour Fire-Rated)..

LEGEND &SAMBOLS:

Section Number
Details No & .Sheet No.
Finish Floor Level
Ren .Concrete Level
Level In Plans
Windows Number
Door Number

	Reinfocement Concrete
	Shear Walls
	Plain Concrete
	Concrete Block
	Tiles
	Stone
R.C.L	Reni. Concrete Level
F.F.L	Finish Floor Level
S.L	Sea Level

REVISION HISTORY :

NO	DRAWINGS	DATE
REV01.		
REV02.		
REV03.		
REV04.		
REV05.		
REV06.		

CONTRACTING AUTHORITY :

Enabel -Belgian Development Agency

FUNDED BY:

Belgium
partner in development

CONSULTANT:

ARAB ENGINEERS
المهندسون العرب

Address :	Hebron -Halhul -Main Street -Natsha Building		
Telefax :	+970 2 2251215	Tel:	+970 2 2226361
Email :	info@arabengineers-Pal.com		
Website :	www.arabengineers-Pal.com		

SHEET NO.:	SHEET TITLE:
SD - 08	**External Works** Auditorium STR .Details

DESIGNER:	Ahmed Salameh
CHECKED BY:	Jamal Salameh
DRAWN BY:	Ahmed Tomizeh

SCALE:	1:200
DATE:	2024 - 02

Sheet(08) of (22) Sheets

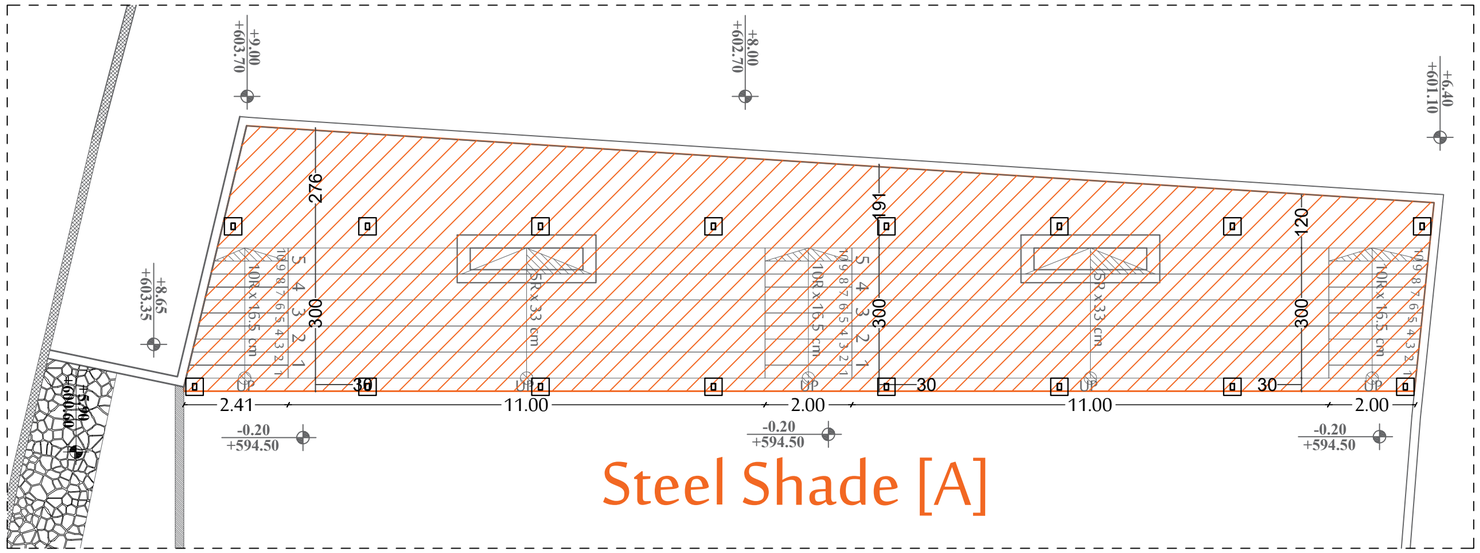

Steel Shade [A]

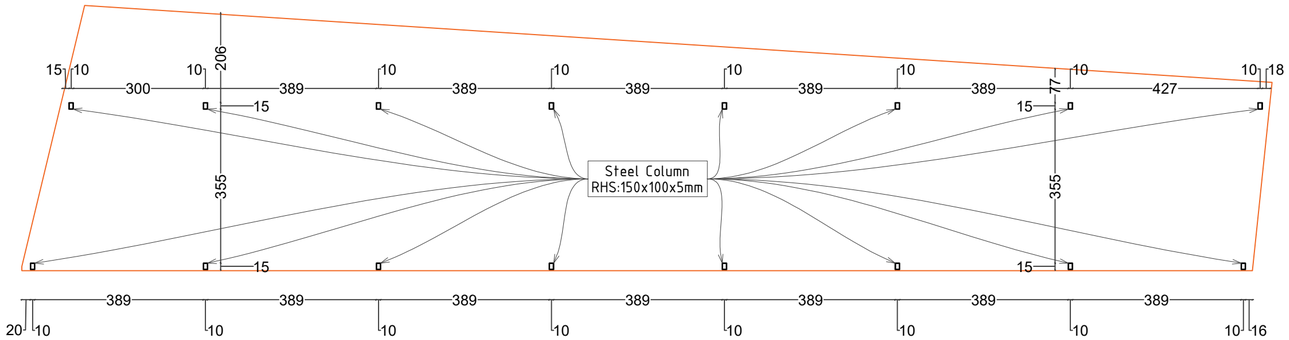

Steel Column Plan

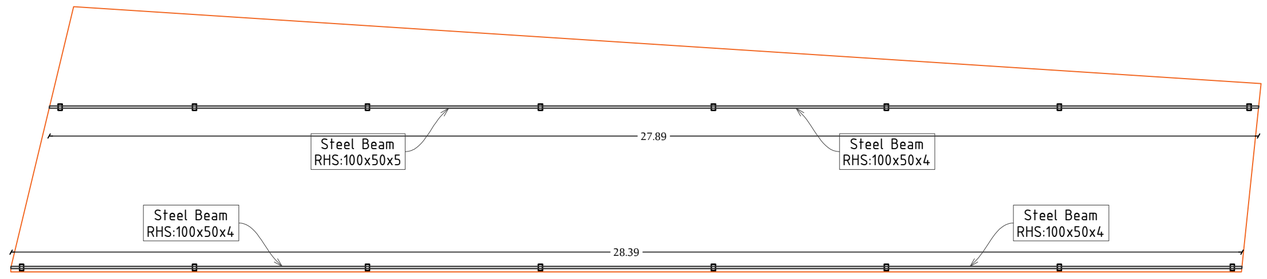

Steel Beam Plan

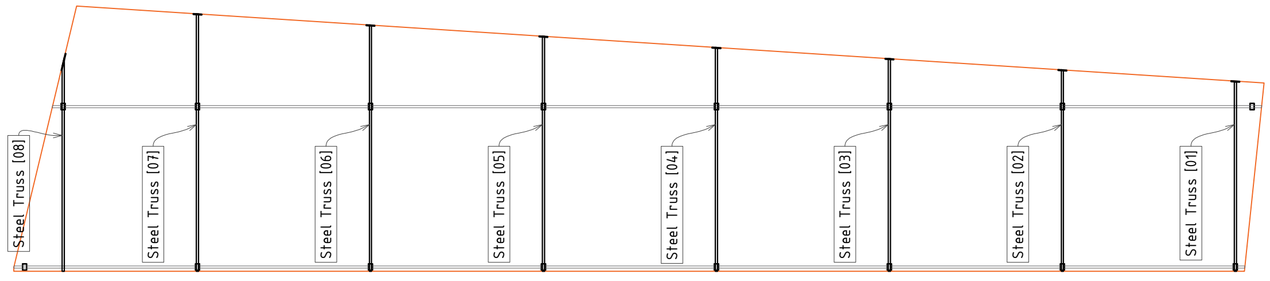

Steel Trusses Plan

P24-2023

PROJECT TITLE:

Al-Sheikh Saad Girls School External Works

REFERENCE :#	###

GENERAL REMARKS:

-1All Dimension In Meters .Unless Stated Other Wise .

-2All Levels are in Meters .

-3All level in Plans ,Sections &Elevations relevant to Zero Level .

-4Corridors Floor Finish is 12(cm)and for Rooms is 14(cm)and for Toilets 10(cm).

-5Any Unclear Data Shall be Clearfied by the Supervision Engineer .

-6All Windows have Protection Guards Fence .

-7All Staircase Tiles are Non -Slip Tiles.

-8All Emergency Doors are Smoke Proof and with Automatic Closuer and 2(Hour Fire-Rated)..

LEGEND &SAMBOLS:

Section Number
Details No & .Sheet No.
Finish Floor Level
Ren .Concrete Level
Level In Plans
Windows Number
Door Number

	Reinfocement Concrete
	Shear Walls
	Plain Concrete
	Concrete Block
	Tiles
	Stone
R.C.L	Reni. Concrete Level
F.F.L	Finish Floor Level
S.L	Sea Level

REVISION HISTORY :

NO	DRAWINGS	DATE
REV01.		
REV02.		
REV03.		
REV04.		
REV05.		
REV06.		

CONTRACTING AUTHORITY :

Enabel -Belgian Development Agency

FUNDED BY:

Belgium partner in development

CONSULTANT:

ARAB ENGINEERS المهندسون العرب

Address :	Hebron -Halhul -Main Street -Natsha Building		
Telefax :	+970 2 2251215	Tel:	+970 2 2226361
Email :	info@arabengineers-Pal.com		
Website :	www.arabengineers-Pal.com		

SHEET NO.:	SHEET TITLE:
SD - 09	External Works Auditorium Shade STR .Details

DESIGNER:	Ahmed Salameh
CHECKED BY:	Jamal Salameh
DRAWN BY:	Ahmed Tomizeh

SCALE:	1:200
DATE:	2024 - 02

Sheet(09) of (22) Sheets

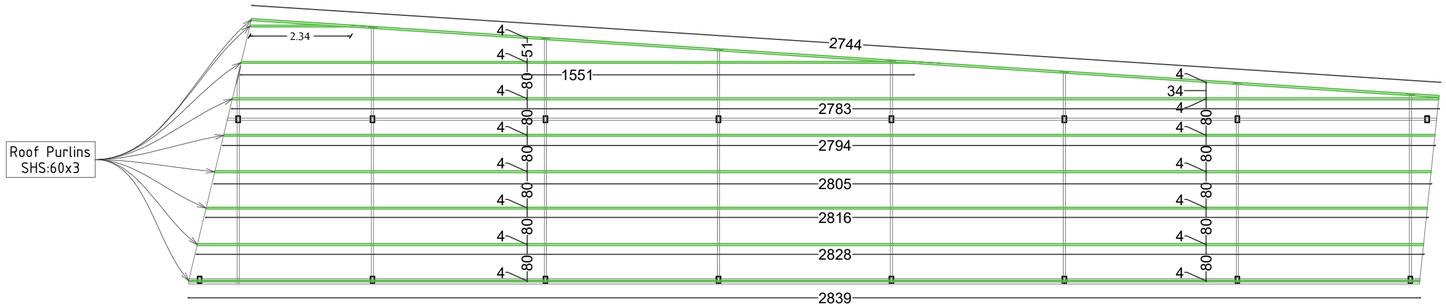

Roof Purlins Plan

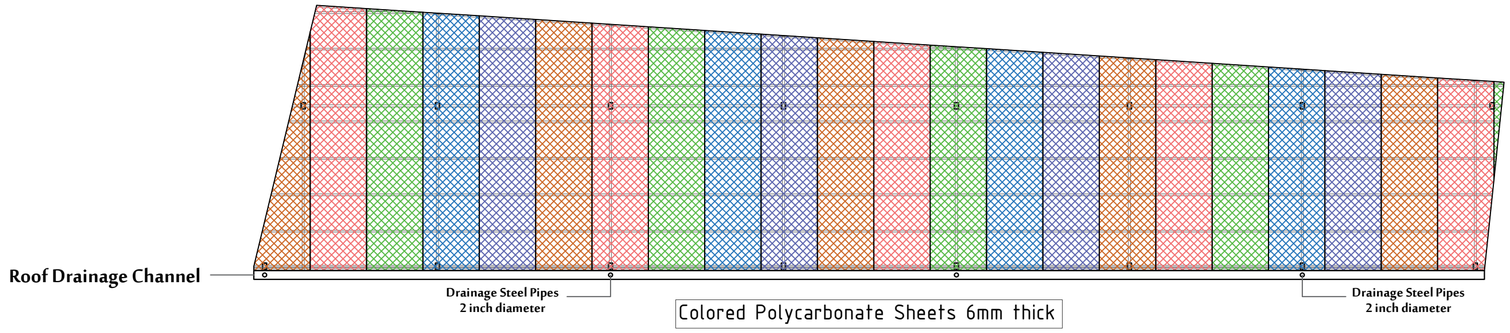

Roof layout

Note: R.C. Column Neck height shall be at least 50 cm.
it can be higher according to the site conditions.
subject to P.M.

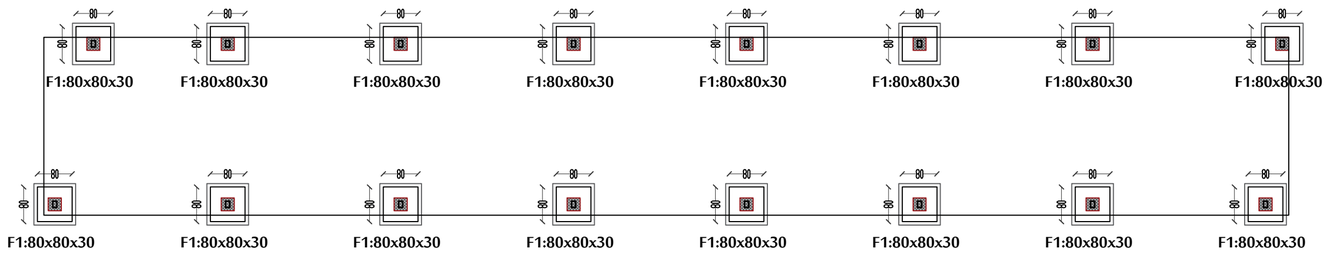

R.C Footing Plan

P24-2023

PROJECT TITLE:

Al-Sheikh Saad Girls School External Works

REFERENCE :#	###

GENERAL REMARKS:

-1All Dimension In Meters .Unless Stated Other Wise .

-2All Levels are in Meters .

-3All level in Plans ,Sections &Elevations relevant to Zero Level .

-4Corridors Floor Finish is 12(cm)and for Rooms is 14(cm)and for Toilets 10(cm).

-5Any Unclear Data Shall be Clearfied by the Supervision Engineer .

-6All Windows have Protection Guards Fence .

-7All Staircase Tiles are Non -Slip Tiles.

-8All Emergency Doors are Smoke Proof and with Automatic Closuer and 2(Hour Fire-Rated)..

LEGEND &SAMBOLS:

Section Number
Details No & .Sheet No.
Finish Floor Level
Ren .Concrete Level
Level In Plans
Windows Number
Door Number

	Reinfocement Concrete
	Shear Walls
	Plain Concrete
	Concrete Block
	Tiles
	Stone
R.C.L	Reni. Concrete Level
F.F.L	Finish Floor Level
S.L	Sea Level

REVISION HISTORY :

NO	DRAWINGS	DATE
REV01.		
REV02.		
REV03.		
REV04.		
REV05.		
REV06.		

CONTRACTING AUTHORITY :

Enabel -Belgian Development Agency

FUNDED BY:

Belgium
partner in development

CONSULTANT:

ARAB ENGINEERS
المهندسون العرب

Address :	Hebron -Halhul -Main Street -Natsha Building		
Telefax :	+970 2 2251215	Tel:	+970 2 2226361
Email :	info@arabengineers-Pal.com		
Website :	www.arabengineers-Pal.com		

SHEET NO.:	SHEET TITLE:
SD - 10	External Works Auditorium Shade STR .Details

DESIGNER:	Ahmed Salameh
CHECKED BY:	Jamal Salameh
DRAWN BY:	Ahmed Tomizeh

SCALE:	1:200
DATE:	2024 - 02

Sheet(10) of (22) Sheets

Steel Truss [01,02,03,04,08]

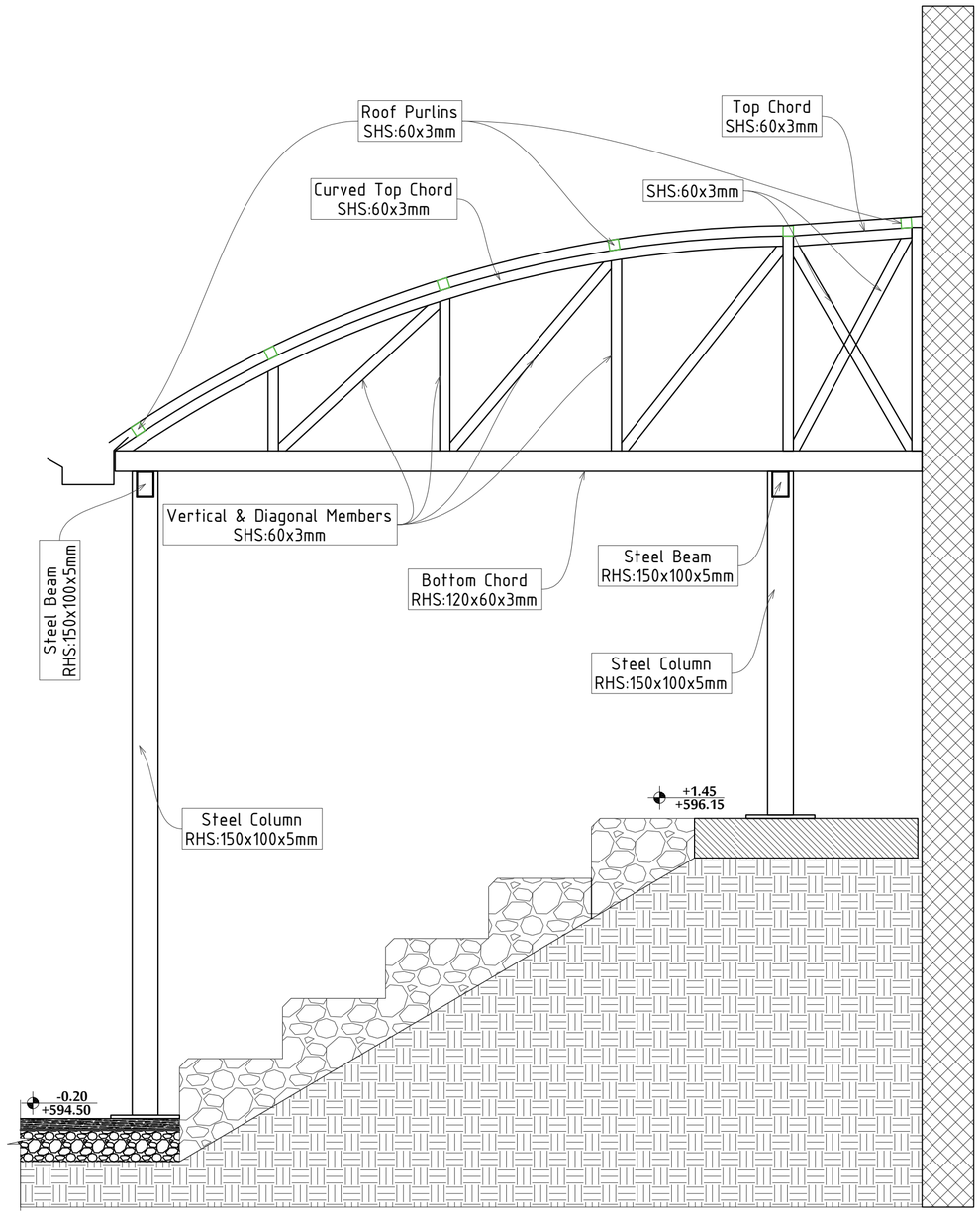

Steel Truss Details

Steel Truss [01,02,03,04,08]

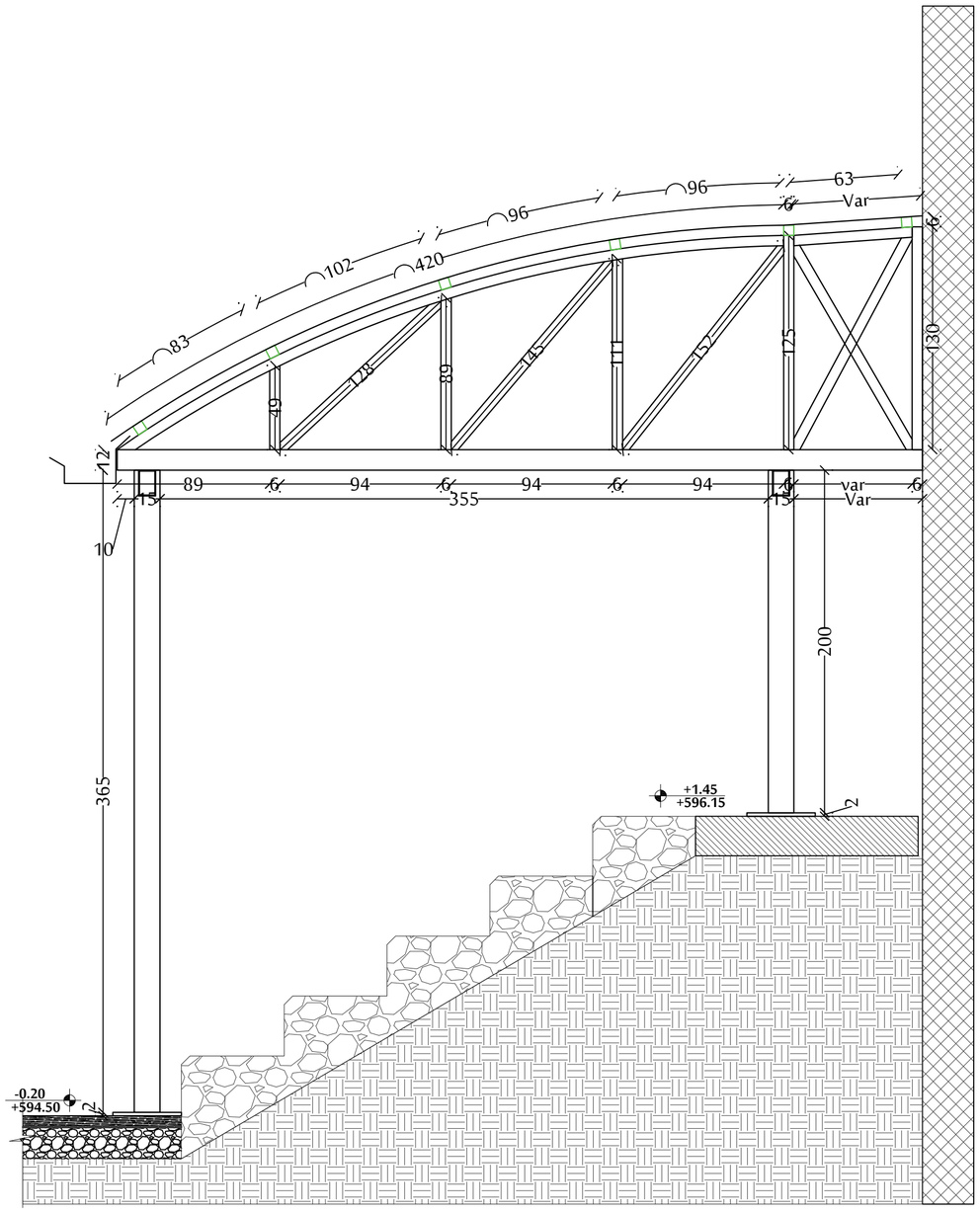

Steel Truss Details

P24-2023

PROJECT TITLE:

Al-Sheikh Saad Girls School External Works

REFERENCE :#	###

GENERAL REMARKS:

-1All Dimension In Meters .Unless Stated Other Wise .

-2All Levels are in Meters .

-3All level in Plans ,Sections &Elevations relevant to Zero Level .

-4Corridors Floor Finish is 12(cm)and for Rooms is 14(cm)and for Toilets 10(cm).

-5Any Unclear Data Shall be Clearfied by the Supervision Engineer .

-6All Windows have Protection Guards Fence .

-7All Staircase Tiles are Non -Slip Tiles.

-8All Emergency Doors are Smoke Proof and with Automatic Closuer and 2(Hour Fire-Rated)..

LEGEND &SAMBOLS:

Section Number
Details No & .Sheet No.
Finish Floor Level
Ren .Concrete Level
Level In Plans
Windows Number
Door Number

	Reinfocement Concrete
	Shear Walls
	Plain Concrete
	Concrete Block
	Tiles
	Stone
R.C.L	Reni. Concrete Level
F.F.L	Finish Floor Level
S.L	Sea Level

REVISION HISTORY :

NO	DRAWINGS	DATE
REV01.		
REV02.		
REV03.		
REV04.		
REV05.		
REV06.		

CONTRACTING AUTHORITY :

Enabel -Belgian Development Agency

FUNDED BY:

Belgium
partner in development

CONSULTANT:

ARAB ENGINEERS
المهندسون العرب

Address :	Hebron -Halhul -Main Street -Natsha Building		
Telefax :	+970 2 2251215	Tel:	+970 2 2226361
Email :	info@arabengineers-Pal.com		
Website :	www.arabengineers-Pal.com		

SHEET NO.:	SHEET TITLE:
SD - 11	External Works Auditorium Shade STR .Details

DESIGNER:	Ahmed Salameh
CHECKED BY:	Jamal Salameh
DRAWN BY:	Ahmed Tomizeh

SCALE:	1:200
DATE:	2024 - 02

Sheet(11) of (22) Sheets

Steel Truss [05,06,07]

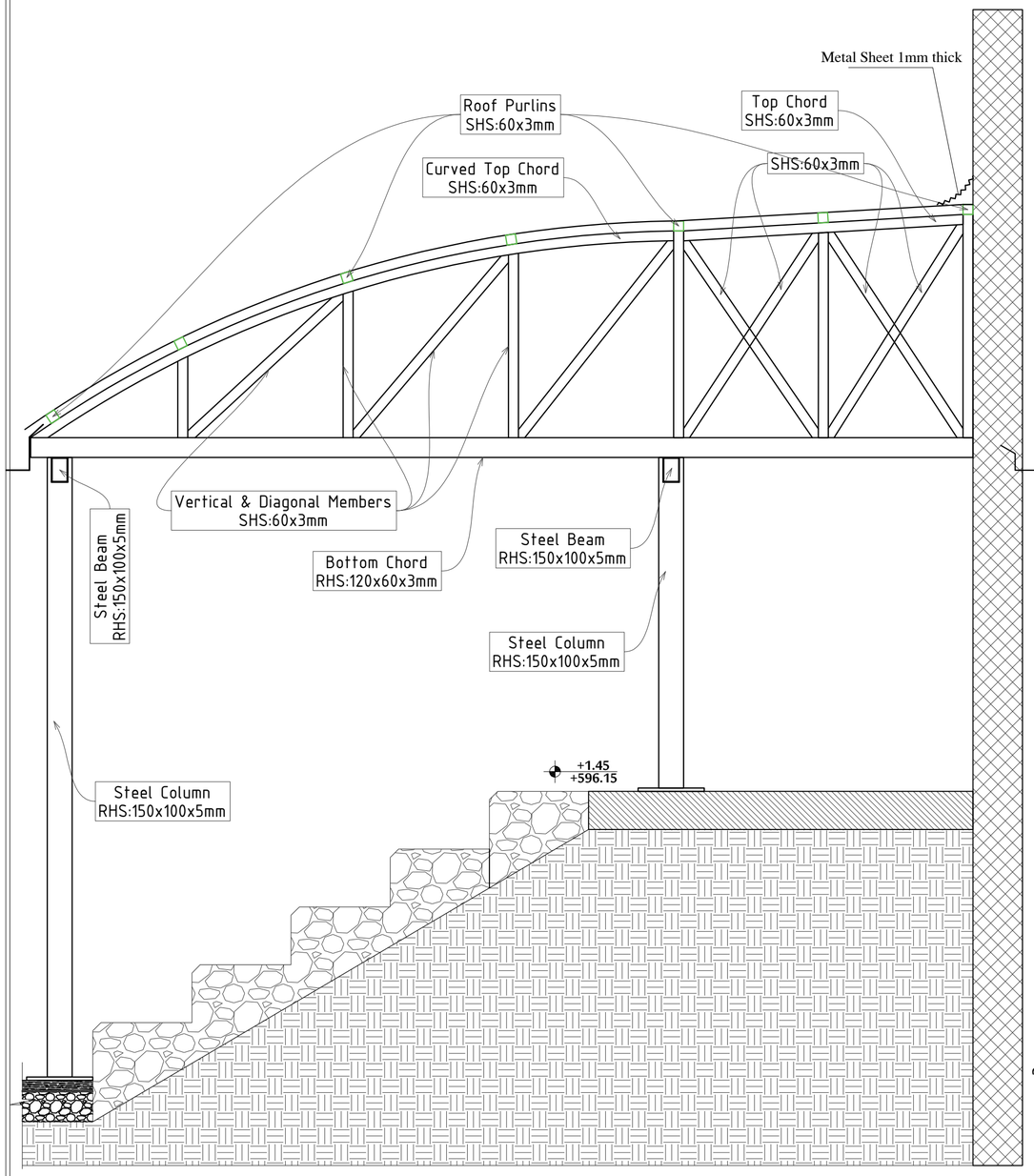

Steel Truss Details

Steel Truss [05,06,07]

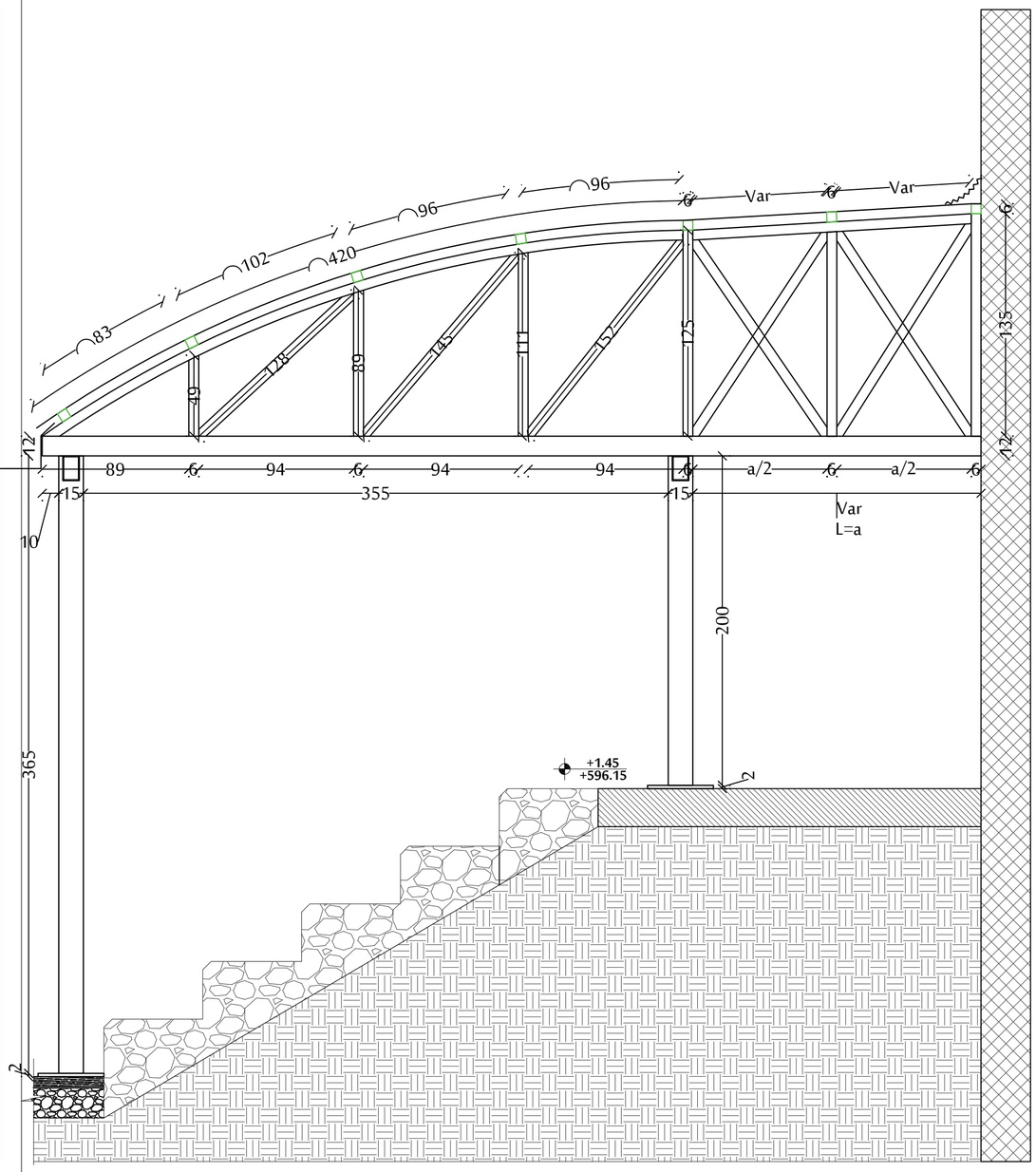

Steel Truss Details

P24-2023

PROJECT TITLE:

Al-Sheikh Saad Girls School External Works

REFERENCE :#	###

GENERAL REMARKS:

-1All Dimension In Meters .Unless Stated Other Wise .

-2All Levels are in Meters .

-3All level in Plans ,Sections &Elevations relevant to Zero Level .

-4Corridors Floor Finish is 12(cm)and for Rooms is 14(cm)and for Toilets 10(cm).

-5Any Unclear Data Shall be Clearfied by the Supervision Engineer .

-6All Windows have Protection Guards Fence .

-7All Staircase Tiles are Non -Slip Tiles.

-8All Emergency Doors are Smoke Proof and with Automatic Closuer and 2(Hour Fire-Rated)..

LEGEND &SAMBOLS:

Section Number
Details No & .Sheet No.
Finish Floor Level
Ren .Concrete Level
Level In Plans
Windows Number
Door Number

	Reinfocement Concrete
	Shear Walls
	Plain Concrete
	Concrete Block
	Tiles
	Stone
R.C.L	Reni. Concrete Level
F.F.L	Finish Floor Level
S.L	Sea Level

REVISION HISTORY :

NO	DRAWINGS	DATE
REV01.		
REV02.		
REV03.		
REV04.		
REV05.		
REV06.		

CONTRACTING AUTHORITY :

Enabel -Belgian Development Agency

FUNDED BY:

Belgium
partner in development

CONSULTANT:

ARAB ENGINEERS
المهندسون العرب

Address :	Hebron -Halhul -Main Street -Natsha Building		
Telefax :	+970 2 2251215	Tel:	+970 2 2226361
Email :	info@arabengineers-Pal.com		
Website :	www.arabengineers-Pal.com		

SHEET NO.:	SHEET TITLE:
SD - 12	External Works Auditorium Shade STR .Details

DESIGNER:	Ahmed Salameh
CHECKED BY:	Jamal Salameh
DRAWN BY:	Ahmed Tomizeh
SCALE:	1:200
DATE:	2024 - 02

Sheet(12) of (22) Sheets

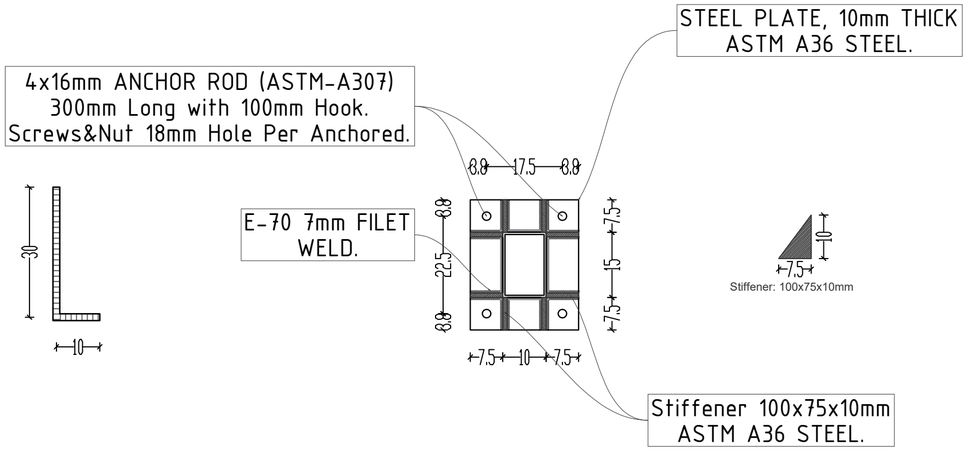

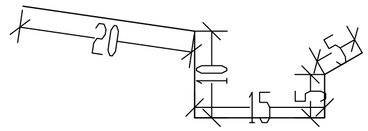

Roof Drainage Gutter

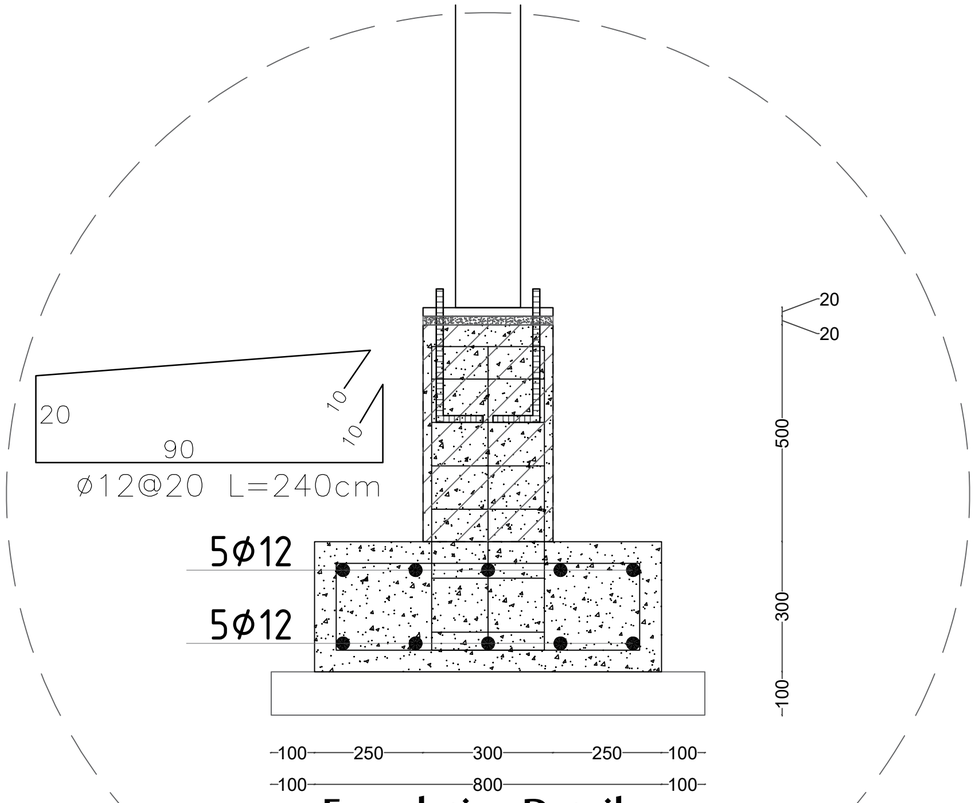

Foundation Details

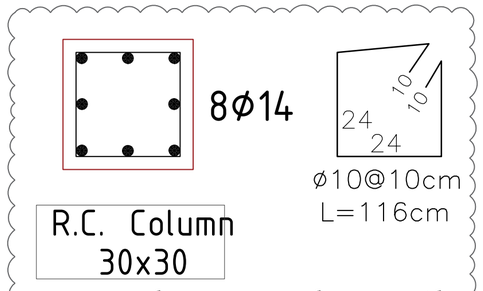

R.C. Column Neck Details

P24-2023

PROJECT TITLE:

Al-Sheikh Saad Girls School External Works

REFERENCE :#	###

GENERAL REMARKS:

-1All Dimension In Meters .Unless Stated Other Wise .

-2All Levels are in Meters .

-3All level in Plans ,Sections &Elevations relevant to Zero Level .

-4Corridors Floor Finish is 12(cm)and for Rooms is 14(cm)and for Toilets 10(cm).

-5Any Unclear Data Shall be Clearfied by the Supervision Engineer .

-6All Windows have Protection Guards Fence .

-7All Staircase Tiles are Non -Slip Tiles.

-8All Emergency Doors are Smoke Proof and with Automatic Closuer and 2(Hour Fire-Rated)..

LEGEND &SAMBOLS:

Section Number

Details No & .Sheet No.

Finish Floor Level

Ren .Concrete Level

Level In Plans

Windows Number

Door Number

	Reinfocement Concrete
	Shear Walls
	Plain Concrete
	Concrete Block
	Tiles
	Stone
R.C.L	Reni. Concrete Level
F.F.L	Finish Floor Level
S.L	Sea Level

REVISION HISTORY :

NO	DRAWINGS	DATE
REV01.		
REV02.		
REV03.		
REV04.		
REV05.		
REV06.		

CONTRACTING AUTHORITY :

Enabel -Belgian Development Agency

FUNDED BY:

Belgium
partner in development

CONSULTANT:

ARAB ENGINEERS
المهندسون العرب

Address :	Hebron -Halhul -Main Street -Natsha Building		
Telefax :	+970 2 2251215	Tel:	+970 2 2226361
Email :	info@arabengineers-Pal.com		
Website :	www.arabengineers-Pal.com		

SHEET NO.:	SHEET TITLE:
SD - 13	External Works Auditorium Shade STR .Details

DESIGNER:	Ahmed Salameh
CHECKED BY:	Jamal Salameh
DRAWN BY:	Ahmed Tomizeh

SCALE:	1:200
DATE:	2024 - 02

Sheet(13) of (22) Sheets

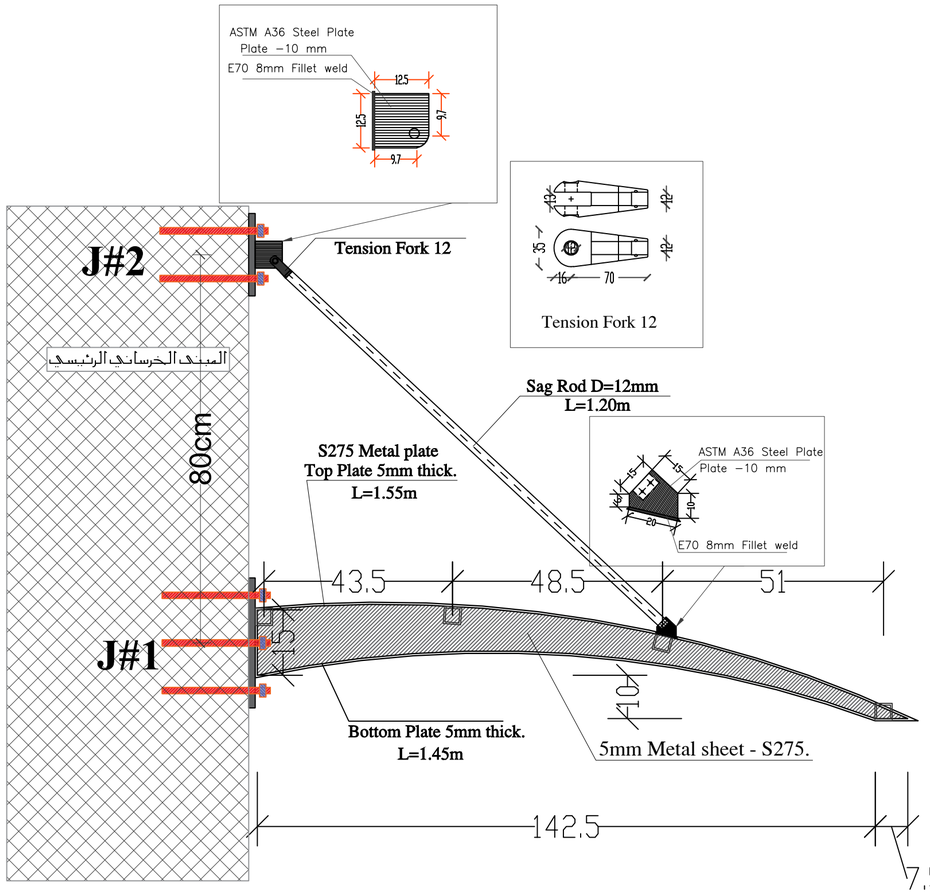

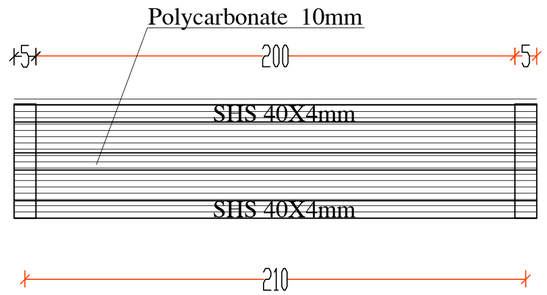

SHS 40X3mm

STEEL WORKS

1. CONNECTIONS: PROVIDE CONNECTIONS AS SHOWN IN THE DETAILS.
2. WELDING REQUIREMENTS:

MINIMUM WELDS: NOT LESS THAN 3/16in FILLET, CONTINUOUS UNLESS OTHERWISE NOTED.

WELD SIZES AND LENGTHS CALLED FOR ON THE DRAWINGS ARE THE NET EFFECTIVE REQUIRED. INCREASE WELD SIZE IF GAPS EXIST AT THE FAYING SURFACE

Note: All Steel Sections & Profiles shall be Hot Rolled Galvanized.

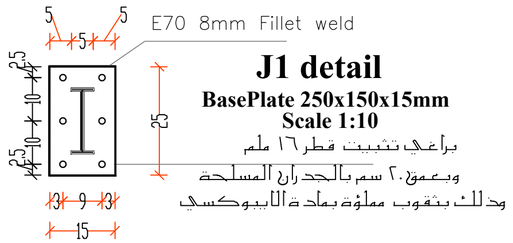

J1 detail
BasePlate 250x150x15mm
Scale 1:10

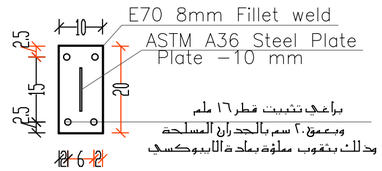

J2 detail
BasePlate 200x100x15mm
Scale 1:10

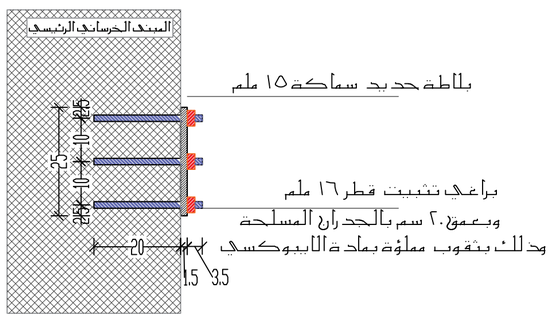

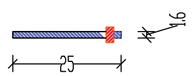

Bolt, Grade 8.8 D=16mm
L=250mm

Co2 welding works shall apply at manufactory.

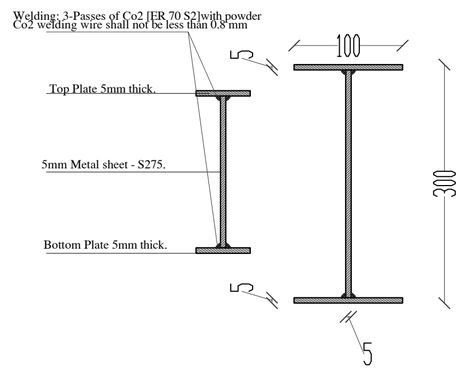

P24-2023

PROJECT TITLE:

Al-Sheikh Saad Girls School External Works

REFERENCE :# ###

GENERAL REMARKS:

-1All Dimension In Meters .Unless Stated Other Wise .

-2All Levels are in Meters .

-3All level in Plans ,Sections &Elevations relevant to Zero Level .

-4Corridors Floor Finish is 12(cm)and for Rooms is 14(cm)and for Toilets 10(cm).

-5Any Unclear Data Shall be Clearfied by the Supervision Engineer .

-6All Windows have Protection Guards Fence .

-7All Staircase Tiles are Non -Slip Tiles.

-8All Emergency Doors are Smoke Proof and with Automatic Closuer and 2(Hour Fire-Rated)..

LEGEND &SAMBOLS:

Section Number
Details No & .Sheet No.
Finish Floor Level
Ren .Concrete Level
Level In Plans
Windows Number
Door Number

Renifocement Concrete
Shear Walls
Plain Concrete
Concrete Block
Tiles
Stone
R.C.L Reni. Concrete Level
F.F.L Finish Floor Level
S.L. Sea Level

REVISION HISTORY :

NO	DRAWINGS	DATE
REV01.		
REV02.		
REV03.		
REV04.		
REV05.		
REV06.		

CONTRACTING AUTHORITY :

Enabel -Belgian Development Agency

FUNDED BY:

Belgium partner in development

CONSULTANT:

ARAB ENGINEERS المهندسون العرب

Address :	Hebron -Halhul -Main Street -Natsha Building		
Telefax :	+970 2 2251215	Tel:	+970 2 2226361
Email :	info@arabengineers-Pal.com		
Website :	www.arabengineers-Pal.com		

SHEET NO.:	SHEET TITLE:
SD - 14	External Works Above Doors Shade STR .Details

DESIGNER:	Ahmed Salameh
CHECKED BY:	Jamal Salameh
DRAWN BY:	Ahmed Tomizeh

SCALE:	1:200
DATE:	2024 - 02

Sheet(14) of (22) Sheets

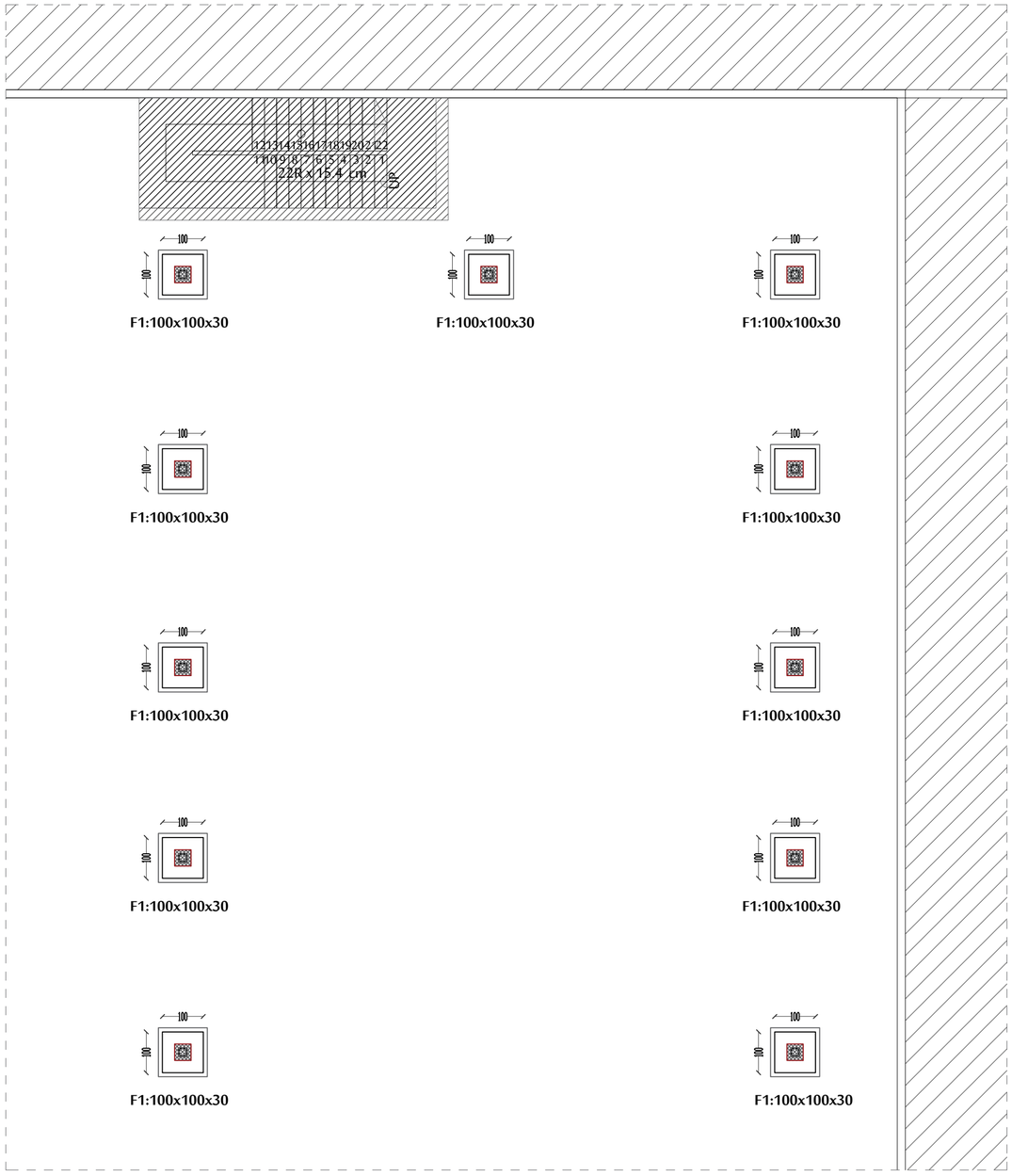

Footing Plan

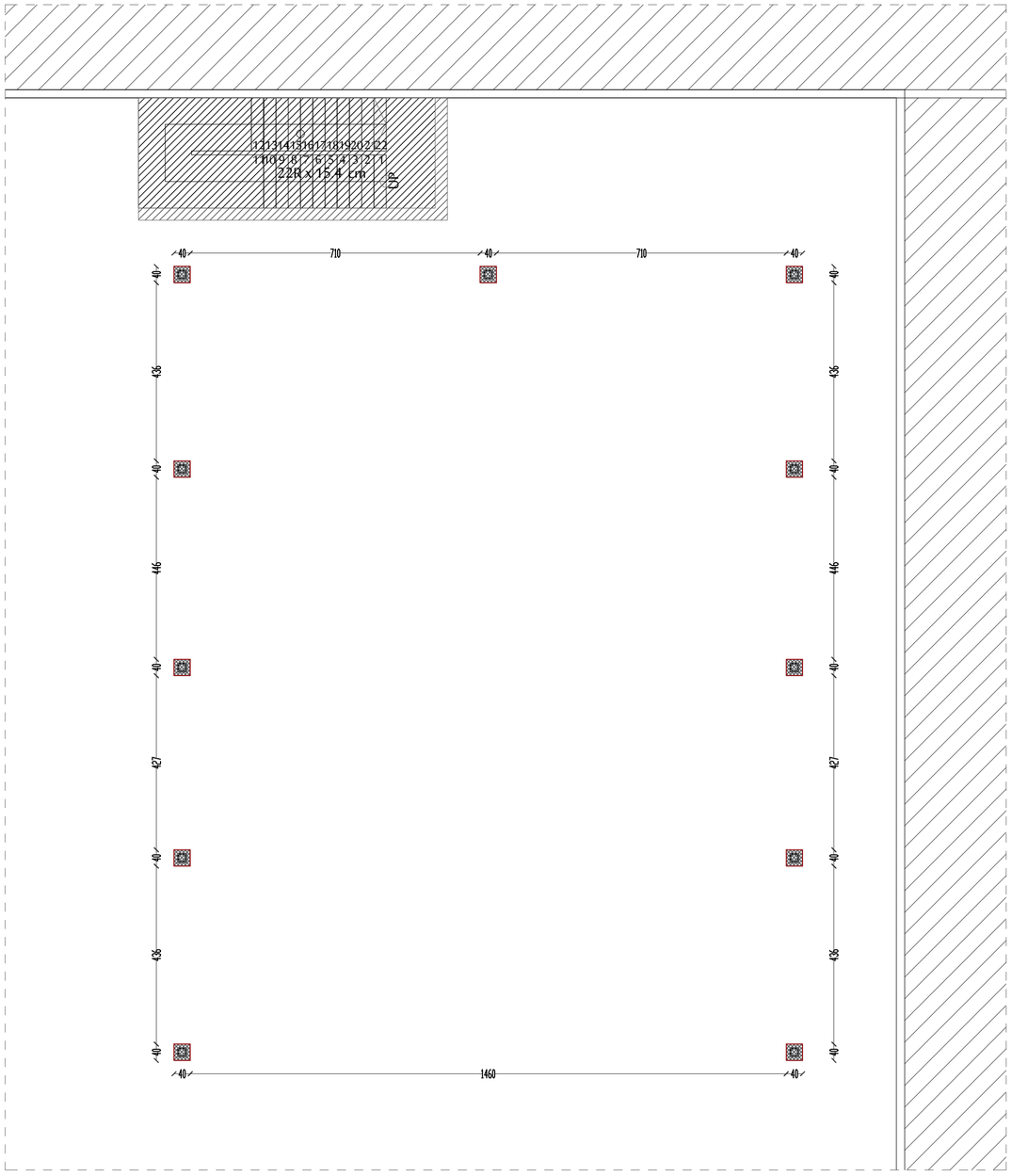

R.C. Column Neck Plan

P24-2023

PROJECT TITLE:

Al-Sheikh Saad Girls School External Works

REFERENCE :#	###

GENERAL REMARKS:

-1All Dimension In Meters .Unless Stated Other Wise .

-2All Levels are in Meters .

-3All level in Plans ,Sections &Elevations relevant to Zero Level .

-4Corridors Floor Finish is 12(cm)and for Rooms is 14(cm)and for Toilets 10(cm).

-5Any Unclear Data Shall be Clearfied by the Supervision Engineer .

-6All Windows have Protection Guards Fence .

-7All Staircase Tiles are Non -Slip Tiles.

-8All Emergency Doors are Smoke Proof and with Automatic Closuer and 2(Hour Fire-Rated)..

LEGEND &SAMBOLS:

- Section Number
- Details No & .Sheet No.
- Finish Floor Level
- Ren .Concrete Level
- Level In Plans
- Windows Number
- Door Number

	Reinfocement Concrete
	Shear Walls
	Plain Concrete
	Concrete Block
	Tiles
	Stone
R.C.L	Reni. Concrete Level
F.F.L	Finish Floor Level
S.L	Sea Level

REVISION HISTORY :

NO	DRAWINGS	DATE
REV01.		
REV02.		
REV03.		
REV04.		
REV05.		
REV06.		

CONTRACTING AUTHORITY :

Enabel -Belgian Development Agency

FUNDED BY:

Belgium
partner in development

CONSULTANT:

ARAB ENGINEERS
المهندسون العرب

Address :	Hebron -Halhul -Main Street -Natsha Building		
Telefax :	+970 2 2251215	Tel:	+970 2 2226361
Email :	info@arabengineers-Pal.com		
Website :	www.arabengineers-Pal.com		

SHEET NO.:	SHEET TITLE:
SD - 15	External Works Yard Shade [Space Truss System] STR .Details

DESIGNER:	Ahmed Salameh
CHECKED BY:	Jamal Salameh
DRAWN BY:	Ahmed Tomizeh

SCALE:	1:200
DATE:	2024 - 02

Sheet(15) of (22) Sheets

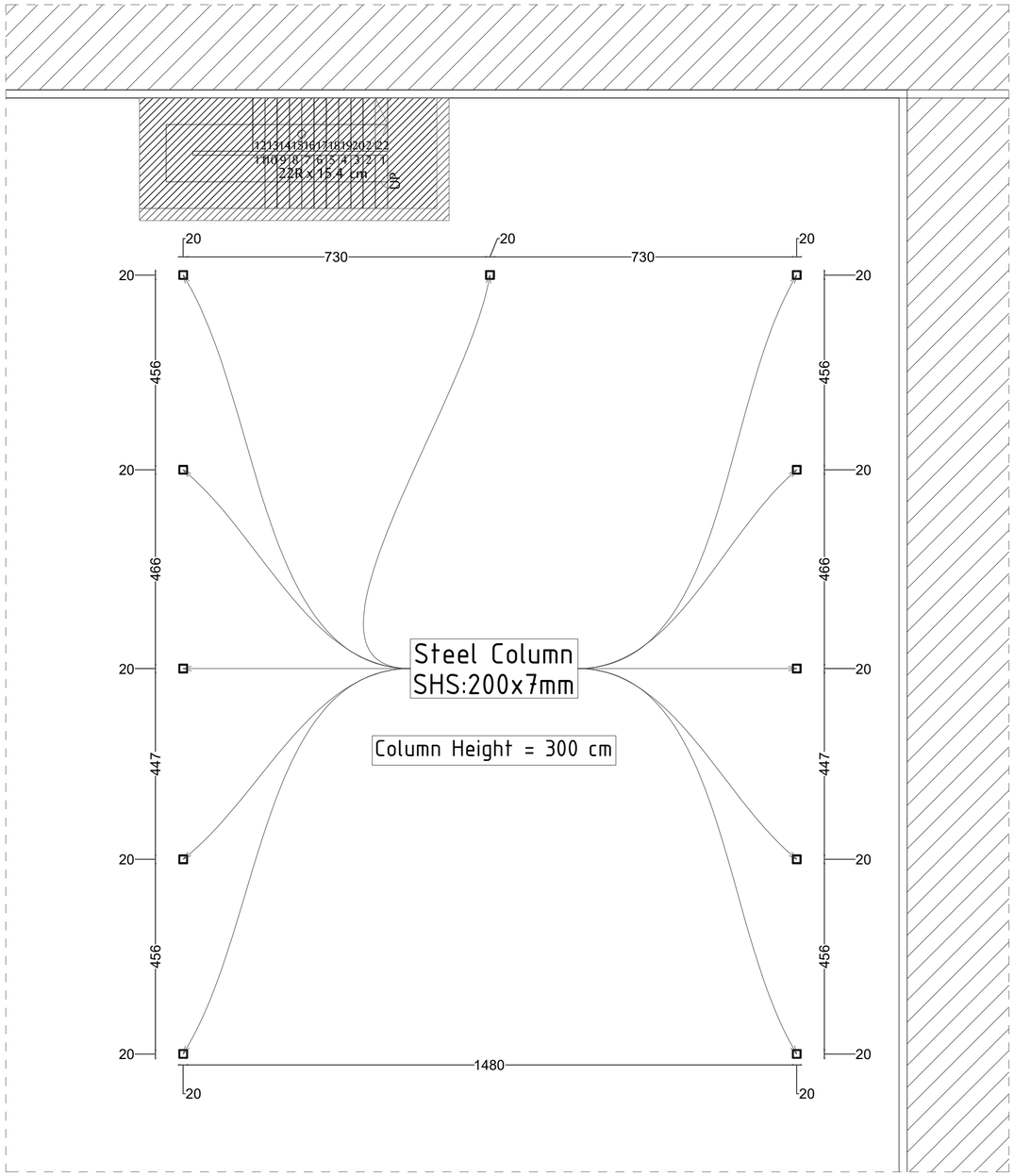

Steel Column Plan

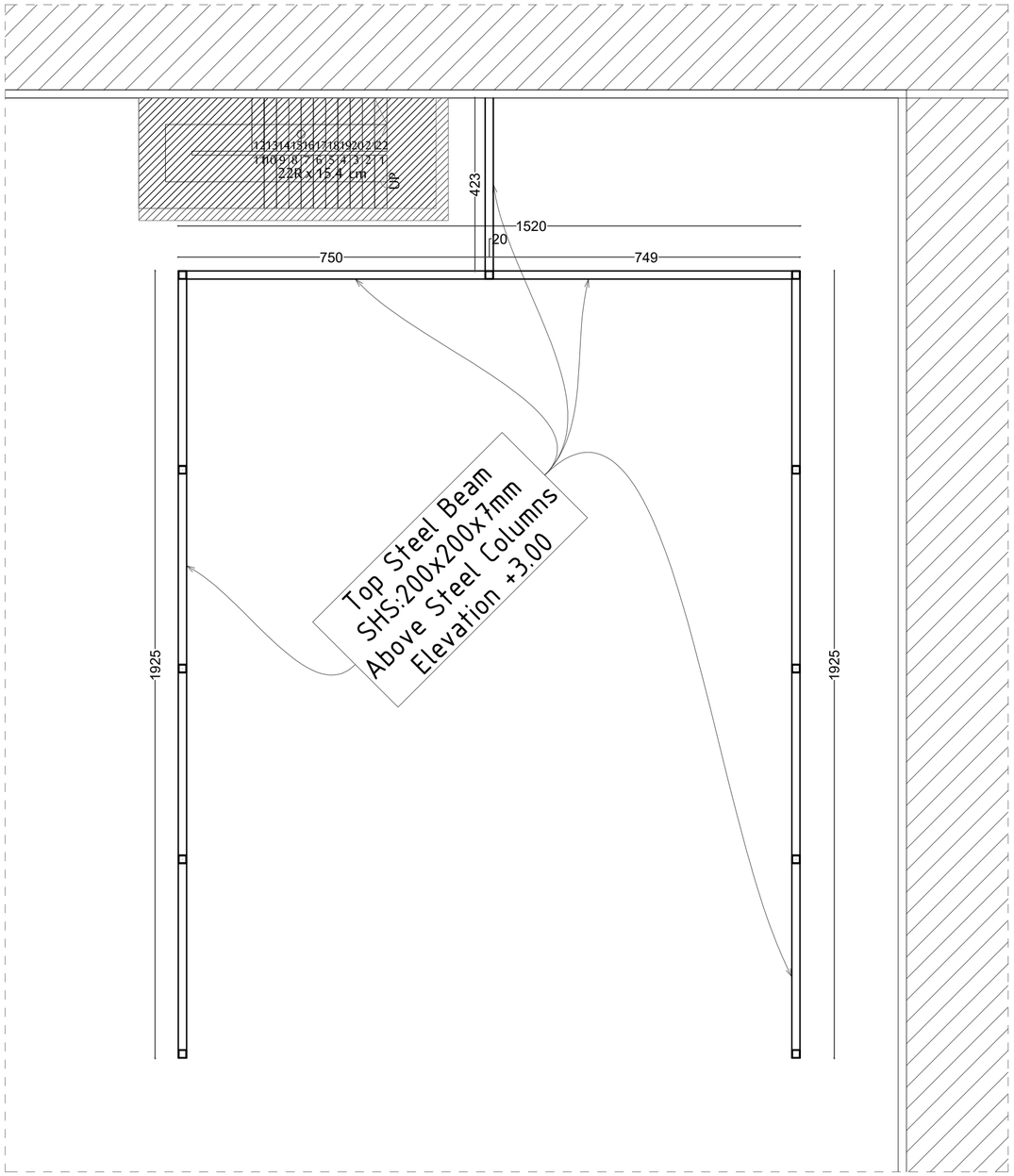

Top Steel Beam Plan

P24-2023

PROJECT TITLE:

Al-Sheikh Saad Girls School External Works

REFERENCE :#	###

GENERAL REMARKS:

-1All Dimension In Meters .Unless Stated Other Wise .

-2All Levels are in Meters .

-3All level in Plans ,Sections &Elevations relevant to Zero Level .

-4Corridors Floor Finish is 12(cm)and for Rooms is 14(cm)and for Toilets 10(cm).

-5Any Unclear Data Shall be Clearfied by the Supervision Engineer .

-6All Windows have Protection Guards Fence .

-7All Staircase Tiles are Non -Slip Tiles.

-8All Emergency Doors are Smoke Proof and with Automatic Closuer and 2(Hour Fire-Rated)..

LEGEND &SAMBOLS:

Section Number
Details No & .Sheet No.
Finish Floor Level
Ren .Concrete Level
Level In Plans
Windows Number
Door Number

	Renifocement Concrete
	Shear Walls
	Plain Concrete
	Concrete Block
	Tiles
	Stone
R.C.L	Reni. Concrete Level
F.F.L	Finish Floor Level
S.L	Sea Level

REVISION HISTORY :

NO	DRAWINGS	DATE
REV01.		
REV02.		
REV03.		
REV04.		
REV05.		
REV06.		

CONTRACTING AUTHORITY :

Enabel -Belgian Development Agency

FUNDED BY:

Belgium
partner in development

CONSULTANT:

ARAB ENGINEERS
المهندسون العرب

Address :	Hebron -Halhul -Main Street -Natsha Building		
Telefax :	+970 2 2251215	Tel:	+970 2 2226361
Email :	info@arabengineers-Pal.com		
Website :	www.arabengineers-Pal.com		

SHEET NO.:	SHEET TITLE:
SD - 16	External Works Yard Shade [Space Truss System] STR .Details

DESIGNER:	Ahmed Salameh
CHECKED BY:	Jamal Salameh
DRAWN BY:	Ahmed Tomizeh

SCALE:	1:200
DATE:	2024 - 02

Sheet(16) of (22) Sheets

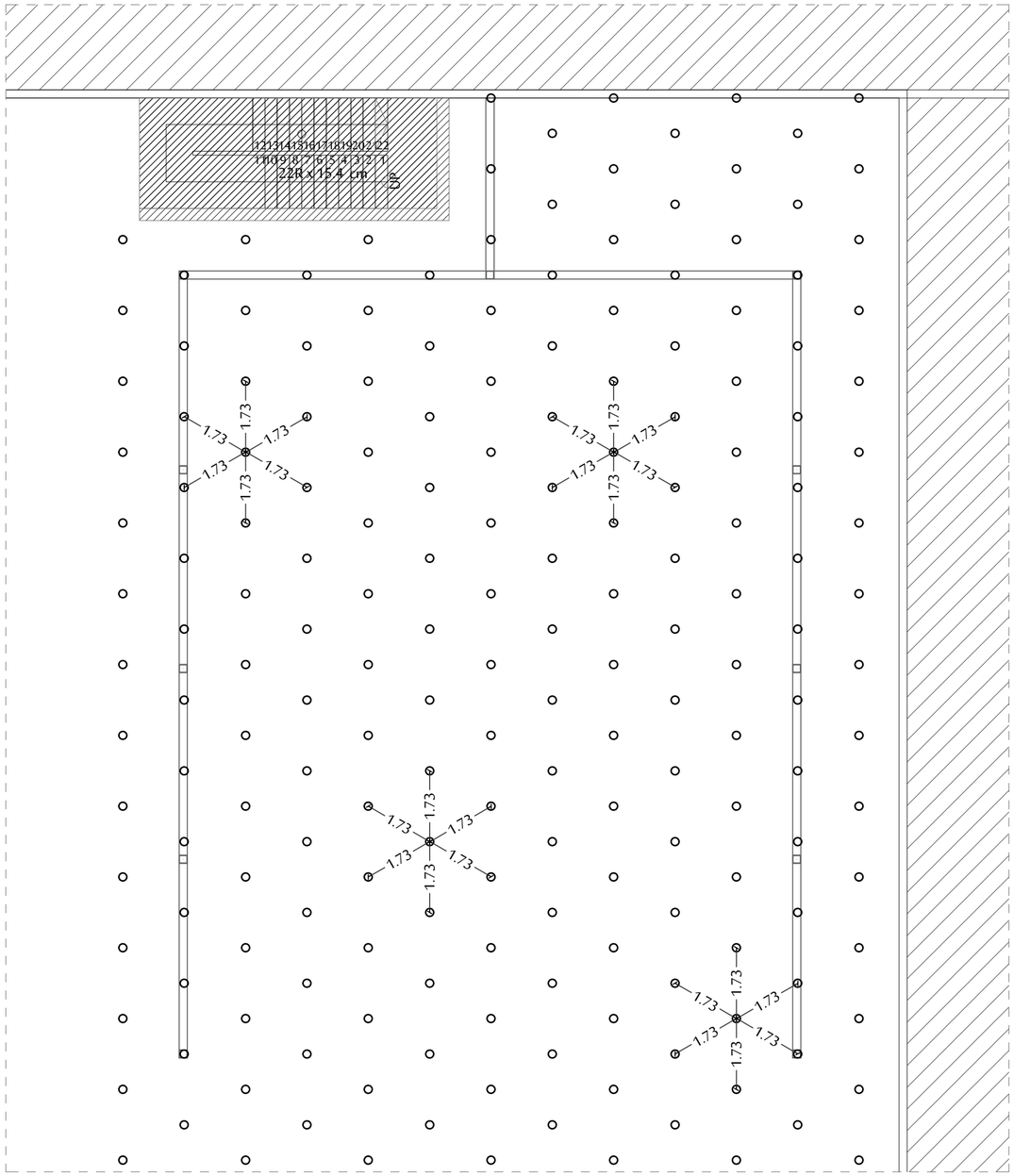

Bottom Node [Solid Ball Bolt]

Elevation +3.00

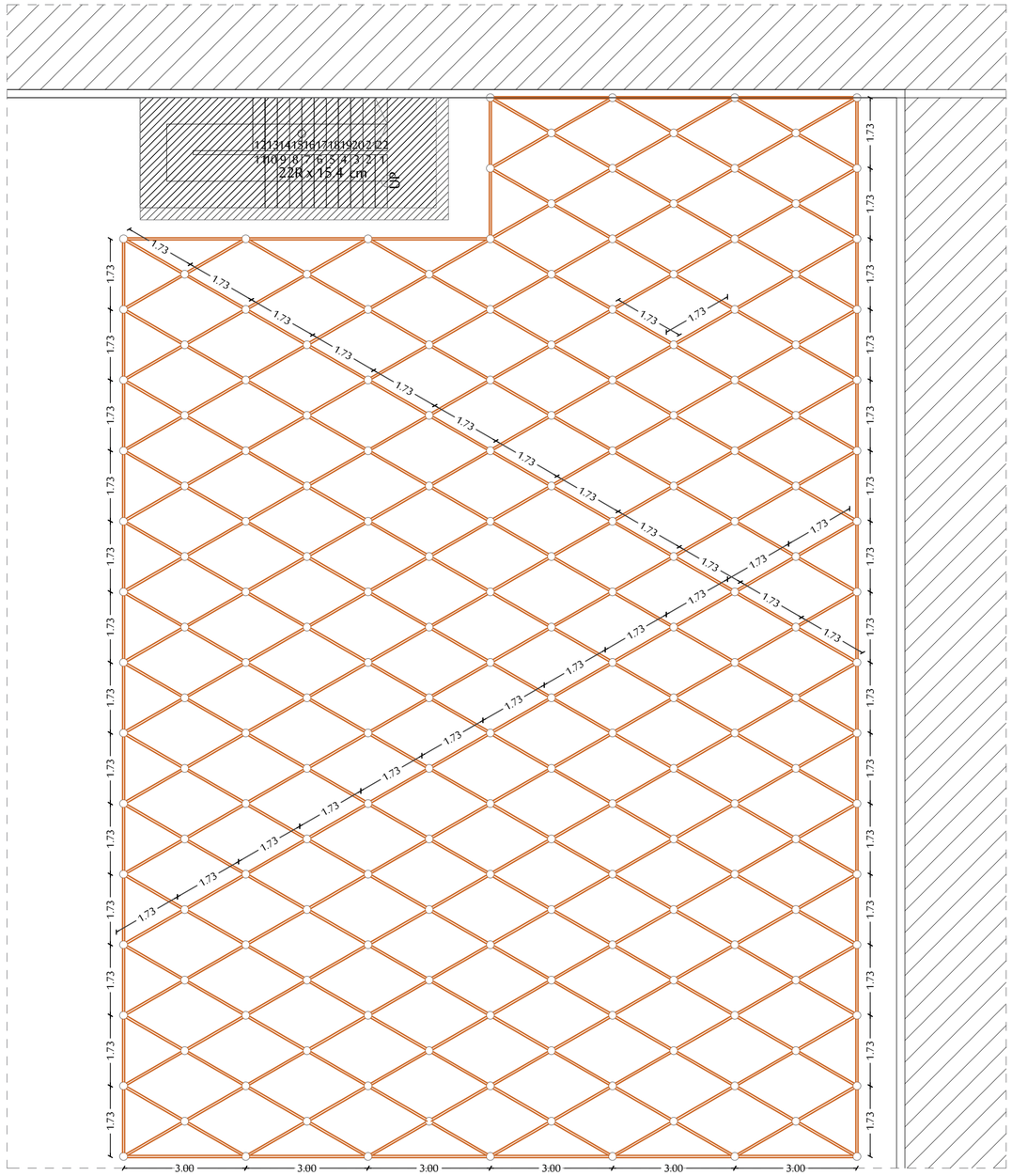

Space Truss Bottom Layer

CHS 60x 4mm

Elevation +3.00

P24-2023

PROJECT TITLE:

Al-Sheikh Saad Girls School External Works

REFERENCE :#	###

GENERAL REMARKS:

-1All Dimension In Meters .Unless Stated Other Wise .

-2All Levels are in Meters .

-3All level in Plans ,Sections &Elevations relevant to Zero Level .

-4Corridors Floor Finish is 12(cm)and for Rooms is 14(cm)and for Toilets 10(cm).

-5Any Unclear Data Shall be Clearfied by the Supervision Engineer .

-6All Windows have Protection Guards Fence .

-7All Staircase Tiles are Non -Slip Tiles.

-8All Emergency Doors are Smoke Proof and with Automatic Closuer and 2(Hour Fire-Rated)..

LEGEND &SAMBOLS:

Section Number

Details No & .Sheet No.

Finish Floor Level

Ren .Concrete Level

Level In Plans

Windows Number

Door Number

	Reinfocement Concrete
	Shear Walls
	Plain Concrete
	Concrete Block
	Tiles
	Stone
R.C.L	Reni. Concrete Level
F.F.L	Finish Floor Level
S.L	Sea Level

REVISION HISTORY :

NO	DRAWINGS	DATE
REV01.		
REV02.		
REV03.		
REV04.		
REV05.		
REV06.		

CONTRACTING AUTHORITY :

Enabel -Belgian Development Agency

FUNDED BY:

Belgium partner in development

CONSULTANT:

ARAB ENGINEERS المهندسون العرب

Address :	Hebron -Halhul -Main Street -Natsha Building		
Telefax :	+970 2 2251215	Tel:	+970 2 2226361
Email :	info@arabengineers-Pal.com		
Website :	www.arabengineers-Pal.com		

SHEET NO.:	SHEET TITLE:
SD - 17	External Works Yard Shade [Space Truss System] STR .Details

DESIGNER:	Ahmed Salameh
CHECKED BY:	Jamal Salameh
DRAWN BY:	Ahmed Tomizeh

SCALE:	1:200
DATE:	2024 - 02

Sheet(17) of (22) Sheets

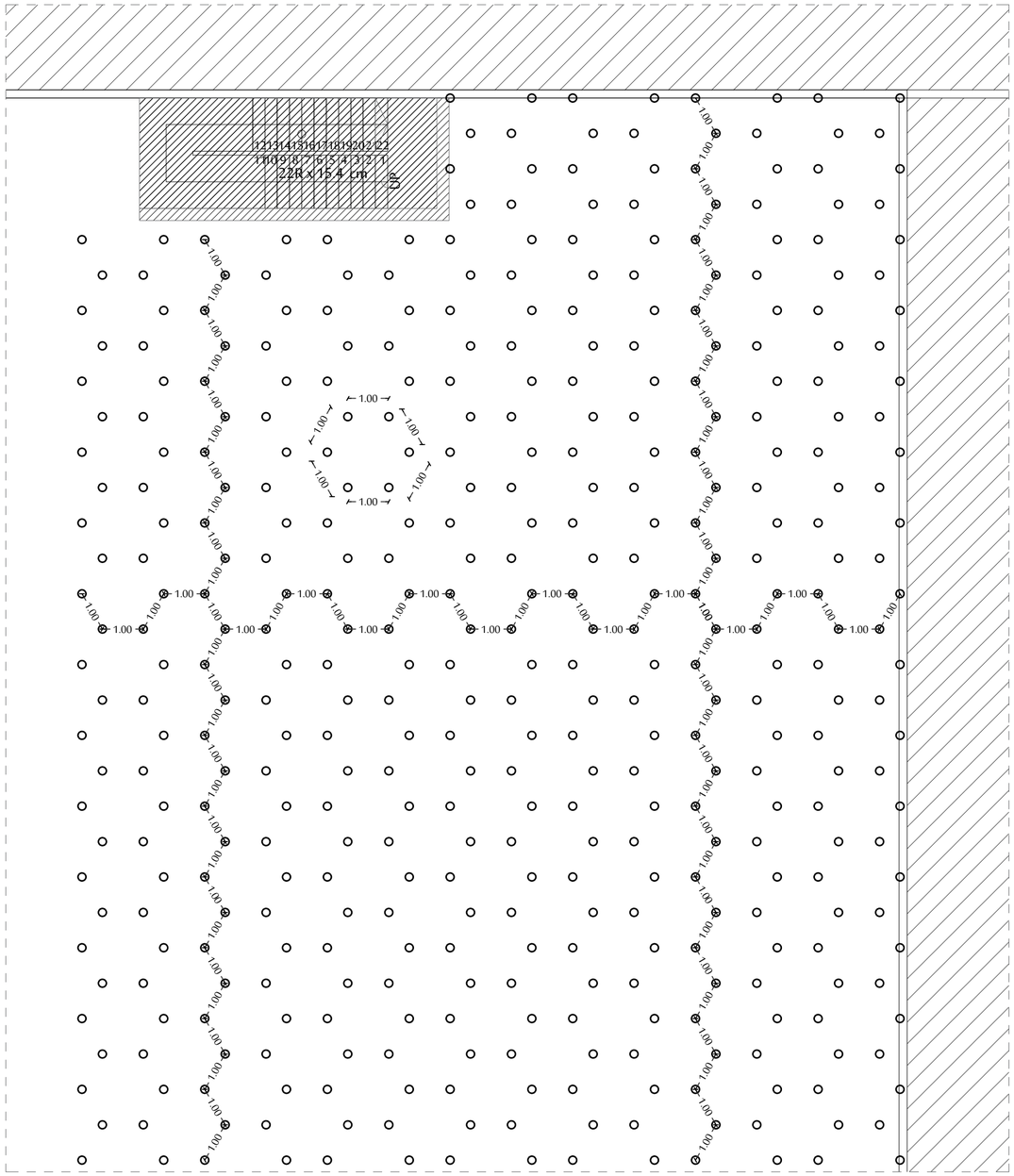

Top Node [Solid Ball Bolt]

Elevation +4.00

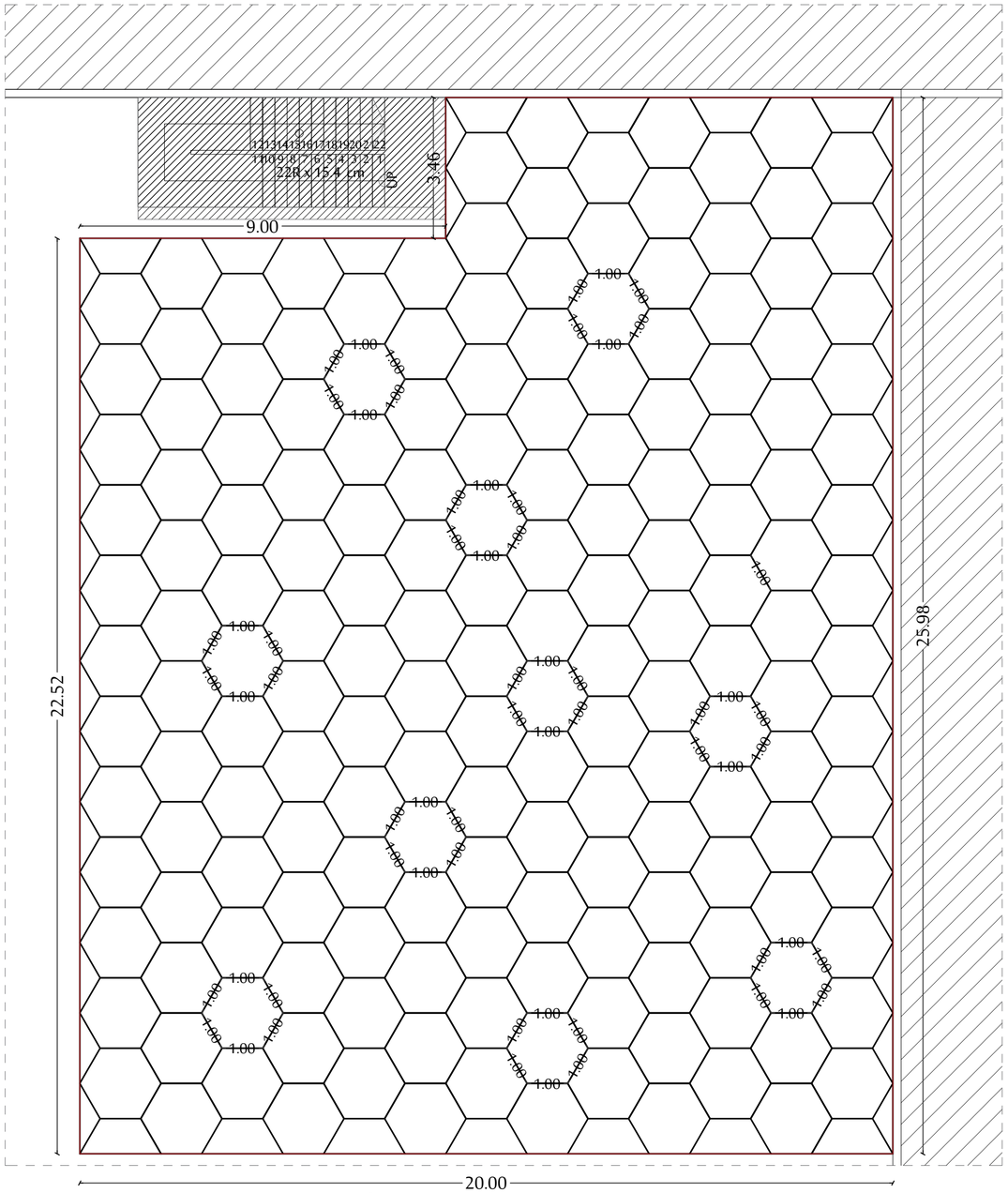

Space Truss Top Layer

CHS 60x 4mm

Elevation +4.00

P24-2023

PROJECT TITLE:

Al-Sheikh Saad Girls School External Works

REFERENCE :#	###

GENERAL REMARKS:

-1All Dimension In Meters .Unless Stated Other Wise .

-2All Levels are in Meters .

-3All level in Plans ,Sections &Elevations relevant to Zero Level .

-4Corridors Floor Finish is 12(cm)and for Rooms is 14(cm)and for Toilets 10(cm).

-5Any Unclear Data Shall be Clearfied by the Supervision Engineer .

-6All Windows have Protection Guards Fence .

-7All Staircase Tiles are Non -Slip Tiles.

-8All Emergency Doors are Smoke Proof and with Automatic Closuer and 2(Hour Fire-Rated)..

LEGEND &SAMBOLS:

Section Number

Details No & .Sheet No.

Finish Floor Level

Ren .Concrete Level

Level In Plans

Windows Number

Door Number

	Reinfocement Concrete
	Shear Walls
	Plain Concrete
	Concrete Block
	Tiles
	Stone
R.C.L	Reni. Concrete Level
F.F.L	Finish Floor Level
S.L.	Sea Level

REVISION HISTORY :

NO	DRAWINGS	DATE
REV01.		
REV02.		
REV03.		
REV04.		
REV05.		
REV06.		

CONTRACTING AUTHORITY :

Enabel -Belgian Development Agency

FUNDED BY:

Belgium partner in development

CONSULTANT:

ARAB ENGINEERS المهندسون العرب

Address :	Hebron -Halhul -Main Street -Natsha Building		
Telefax :	+970 2 2251215	Tel:	+970 2 2226361
Email :	info@arabengineers-Pal.com		
Website :	www.arabengineers-Pal.com		

SHEET NO.:	SHEET TITLE:
SD - 18	External Works Yard Shade [Space Truss System] STR .Details

DESIGNER:	Ahmed Salameh
CHECKED BY:	Jamal Salameh
DRAWN BY:	Ahmed Tomizeh

SCALE:	1:200
DATE:	2024 - 02

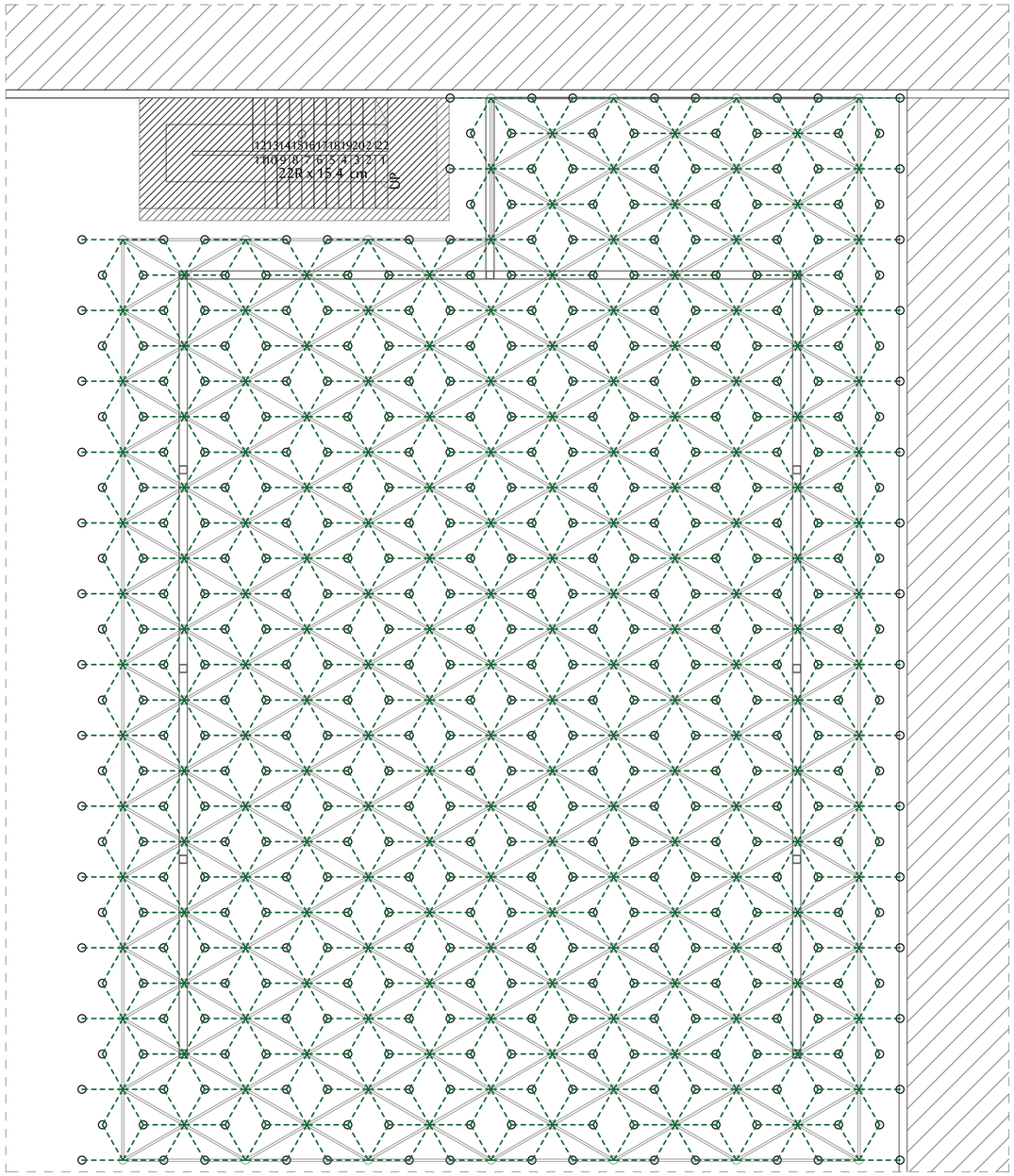

Space Truss Diagonal Members

Elevation 3.00-4.00

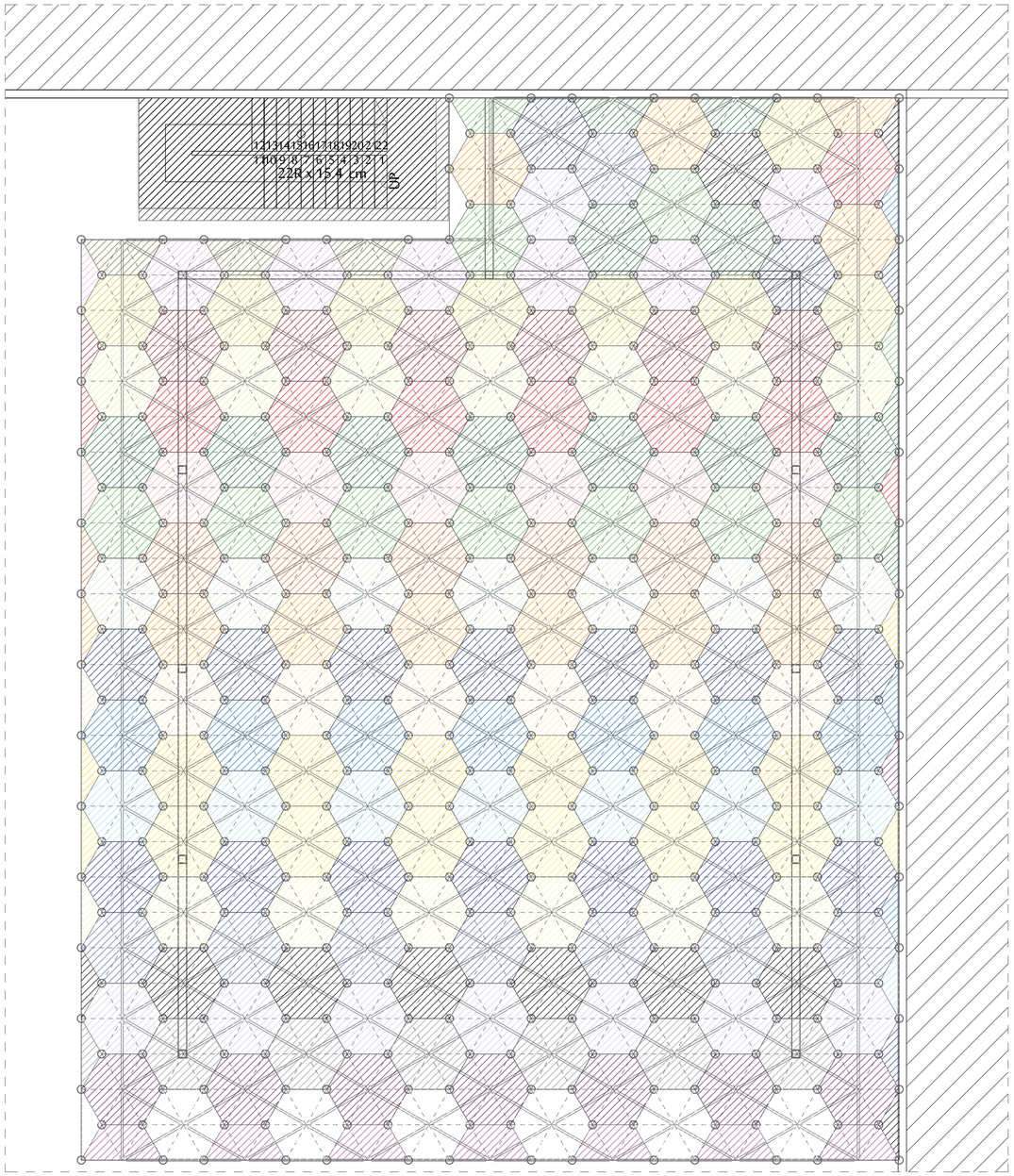

Colored Polycarbonate Sheets 6mm thick

Elevation +4.00

P24-2023

PROJECT TITLE:

Al-Sheikh Saad Girls School External Works

REFERENCE :#	###

GENERAL REMARKS:

-1All Dimension In Meters .Unless Stated Other Wise .

-2All Levels are in Meters .

-3All level in Plans ,Sections &Elevations relevant to Zero Level .

-4Corridors Floor Finish is 12(cm)and for Rooms is 14(cm)and for Toilets 10(cm).

-5Any Unclear Data Shall be Clearfied by the Supervision Engineer .

-6All Windows have Protection Guards Fence .

-7All Staircase Tiles are Non -Slip Tiles.

-8All Emergency Doors are Smoke Proof and with Automatic Closuer and 2(Hour Fire-Rated)..

LEGEND &SAMBOLS:

- Section Number
- Details No & .Sheet No.
- Finish Floor Level
- Ren .Concrete Level
- Level In Plans
- Windows Number
- Door Number

	Reinfocement Concrete
	Shear Walls
	Plain Concrete
	Concrete Block
	Tiles
	Stone
R.C.L	Reni. Concrete Level
F.F.L	Finish Floor Level
S.L	Sea Level

REVISION HISTORY :

NO	DRAWINGS	DATE
REV01.		
REV02.		
REV03.		
REV04.		
REV05.		
REV06.		

CONTRACTING AUTHORITY :

Enabel -Belgian Development Agency

FUNDED BY:

Belgium partner in development

CONSULTANT:

ARAB ENGINEERS المهندسون العرب

Address :	Hebron -Halhul -Main Street -Natsha Building		
Telefax :	+970 2 2251215	Tel:	+970 2 2226361
Email :	info@arabengineers-Pal.com		
Website :	www.arabengineers-Pal.com		

SHEET NO.:	SHEET TITLE:
SD - 19	Yard Shade [Space Truss System] STR .Details

DESIGNER:	Ahmed Salameh
CHECKED BY:	Jamal Salameh
DRAWN BY:	Ahmed Tomizeh

SCALE:	1:200
DATE:	2024 - 02

Sheet(19) of (22) Sheets

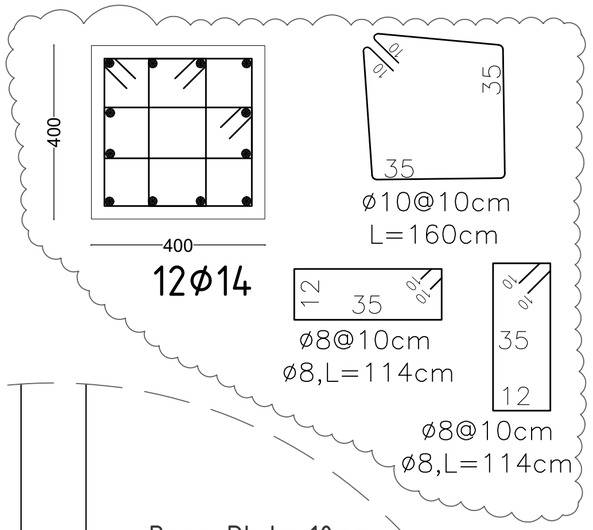

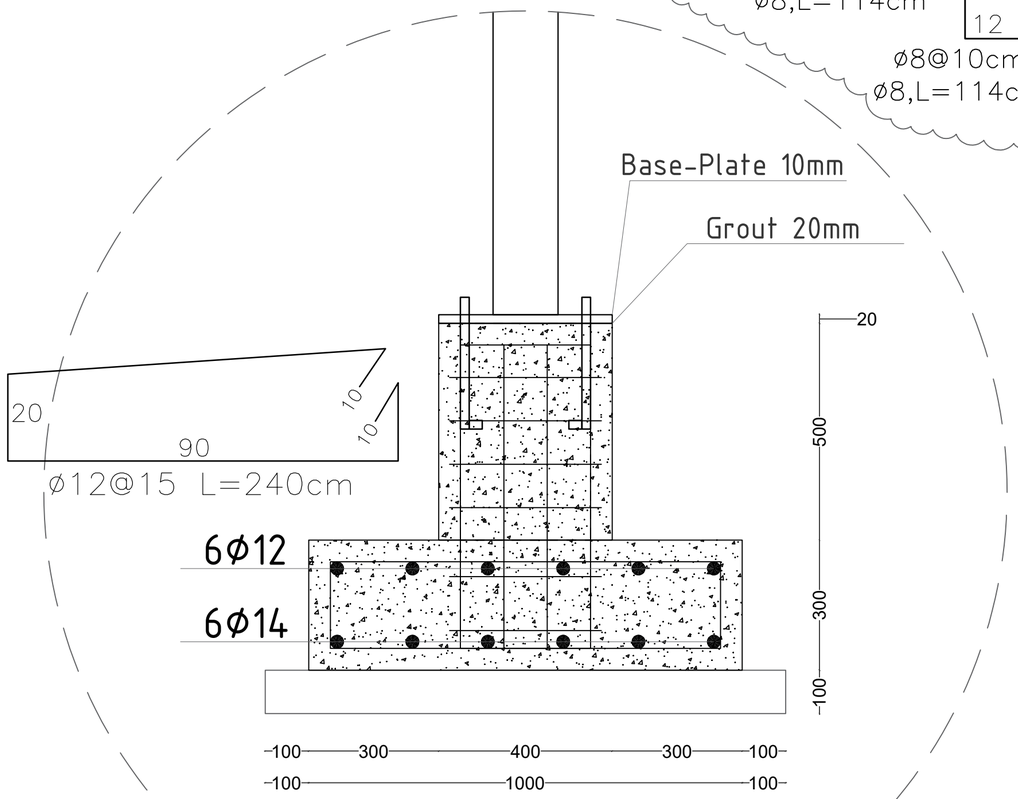

Note: R.C. Column Neck height shall be at least 50 cm.
it can be higher according to the site conditions.
subject to P.M.

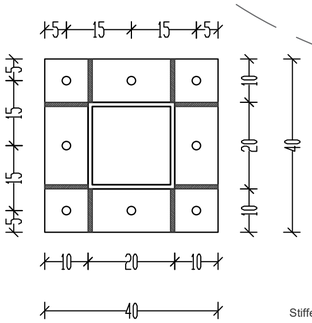

Stiffener: 100x100x10mm

Base-Plate
400X400X10mm

Bolt M20,D=20mm
Length=50cm

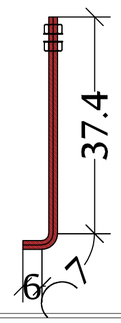

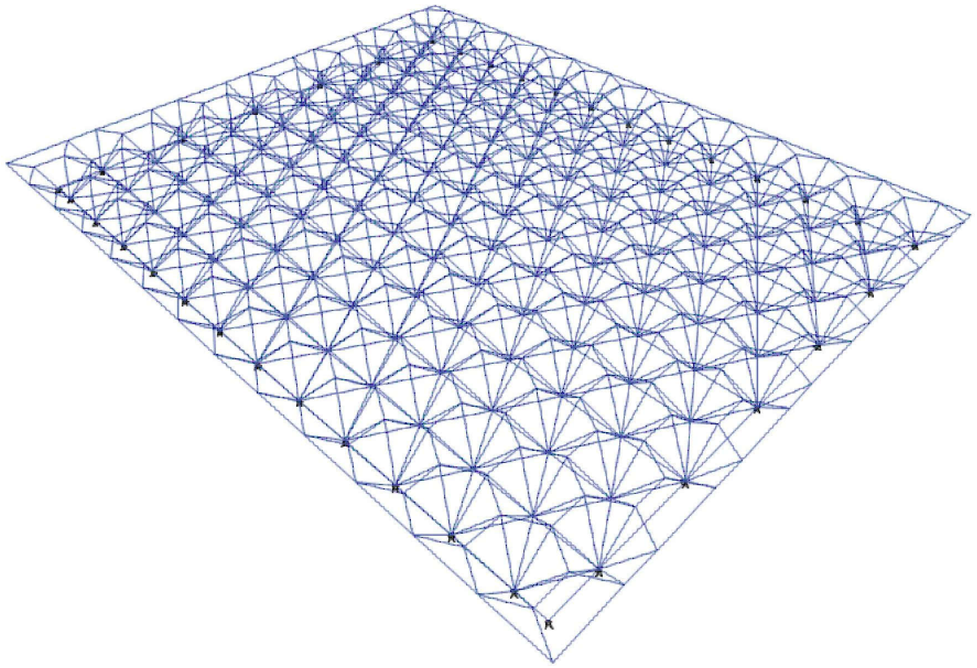

Space Truss Layout.

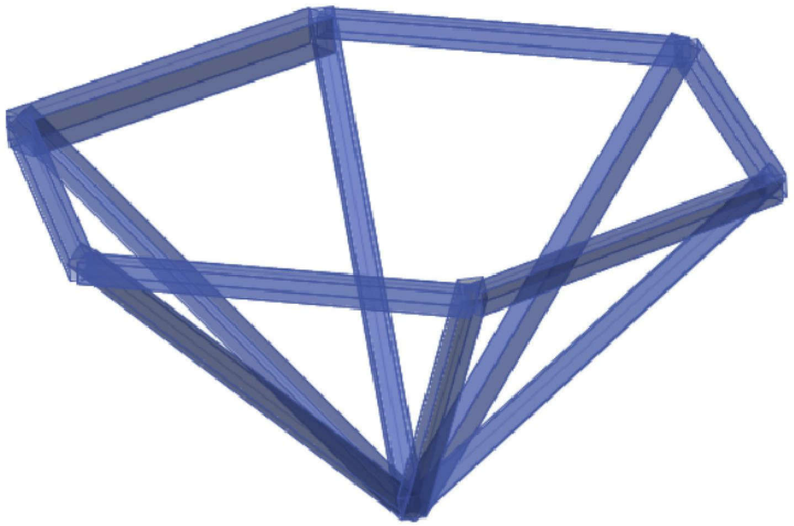

Single Cell Layout.

P24-2023

PROJECT TITLE:

Al-Sheikh Saad Girls School External Works

REFERENCE :# ###

GENERAL REMARKS:

-1All Dimension In Meters .Unless Stated Other Wise .

-2All Levels are in Meters .

-3All level in Plans ,Sections &Elevations relevant to Zero Level .

-4Corridors Floor Finish is 12(cm)and for Rooms is 14(cm)and for Toilets 10(cm).

-5Any Unclear Data Shall be Clearfied by the Supervision Engineer .

-6All Windows have Protection Guards Fence .

-7All Staircase Tiles are Non -Slip Tiles.

-8All Emergency Doors are Smoke Proof and with Automatic Closuer and 2(Hour Fire-Rated)..

LEGEND &SAMBOLS:

Section Number
Details No & .Sheet No.
Finish Floor Level
Ren .Concrete Level
Level In Plans
Windows Number
Door Number

Renifocement Concrete
Shear Walls
Plain Concrete
Concrete Block
Tiles
Stone
R.C.L Reni. Concrete Level
F.F.L. Finish Floor Level
S.L. Sea Level

REVISION HISTORY :

NO	DRAWINGS	DATE
REV01.		
REV02.		
REV03.		
REV04.		
REV05.		
REV06.		

CONTRACTING AUTHORITY :

Enabel -Belgian Development Agency

FUNDED BY:

Belgium
partner in development

CONSULTANT:

ARAB ENGINEERS
المهندسون العرب

Address :	Hebron -Halhul -Main Street -Natsha Building		
Telefax :	+970 2 2251215	Tel:	+970 2 2226361
Email :	info@arabengineers-Pal.com		
Website :	www.arabengineers-Pal.com		

SHEET NO.:	SHEET TITLE:
SD - 20	External Works Yard Shade [Space Truss System] STR .Details

DESIGNER:	Ahmed Salameh
CHECKED BY:	Jamal Salameh
DRAWN BY:	Ahmed Tomizeh
SCALE:	1:200
DATE:	2024 - 02

Sheet(20) of (22) Sheets

Space Truss
General Structural Details.

Cones according to EN10025

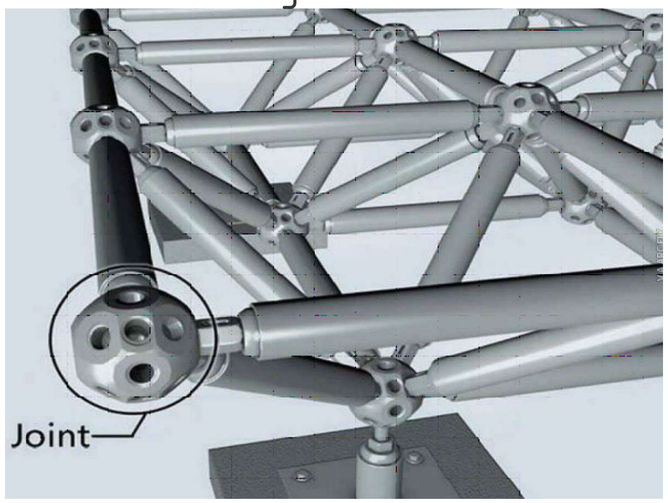

General Shape

Node [Ball Bolt]

Pipes according to EN 10025. S275JR.

Min Yield Strength 275 N/mm2 Min Tensile Strength 450 N/mm2

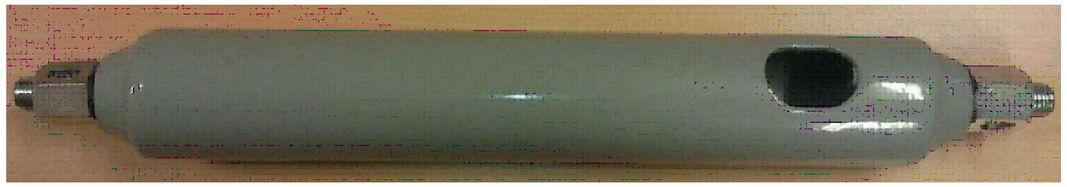

Internal Members.

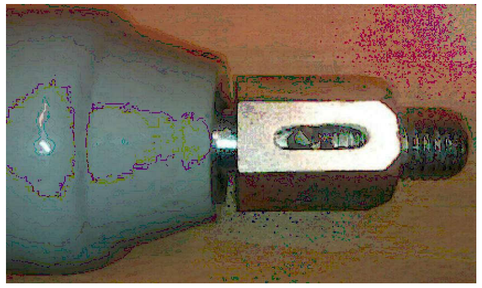

Nuts

Cones according to EN10025 Spheres of C45 according to EN 10083-2

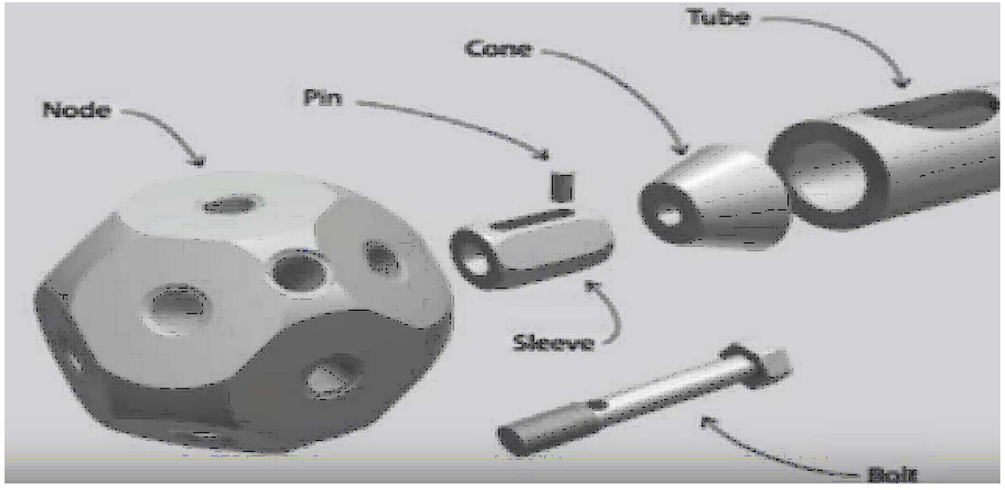

Space Truss Formula.

P24-2023

PROJECT TITLE:

Al-Sheikh Saad Girls School External Works

REFERENCE :# ###

GENERAL REMARKS:

-1All Dimension In Meters .Unless Stated Other Wise .

-2All Levels are in Meters .

-3All level in Plans ,Sections &Elevations relevant to Zero Level .

-4Corridors Floor Finish is 12(cm)and for Rooms is 14(cm)and for Toilets 10(cm).

-5Any Unclear Data Shall be Clearfied by the Supervision Engineer .

-6All Windows have Protection Guards Fence .

-7All Staircase Tiles are Non -Slip Tiles.

-8All Emergency Doors are Smoke Proof and with Automatic Closuer and 2(Hour Fire-Rated)..

LEGEND &SAMBOLS:

Section Number
Details No & .Sheet No.
Finish Floor Level
Ren .Concrete Level
Level In Plans
Windows Number
Door Number

	Renifocement Concrete
	Shear Walls
	Plain Concrete
	Concrete Block
	Tiles
	Stone
R.C.L	Reni. Concrete Level
F.F.L.	Finish Floor Level
S.L.	Sea Level

REVISION HISTORY :

NO	DRAWINGS	DATE
REV01.		
REV02.		
REV03.		
REV04.		
REV05.		
REV06.		

CONTRACTING AUTHORITY :

Enabel -Belgian Development Agency

FUNDED BY:

Belgium partner in development

CONSULTANT:

ARAB ENGINEERS المهندسون العرب

Address :	Hebron -Halhul -Main Street -Natsha Building		
Telefax :	+970 2 2251215	Tel:	+970 2 2226361
Email :	info@arabengineers-Pal.com		
Website :	www.arabengineers-Pal.com		

SHEET NO.:	SHEET TITLE:
SD - 21	External Works Yard Shade [Space Truss System] STR .Details

DESIGNER:	Ahmed Salameh
CHECKED BY:	Jamal Salameh
DRAWN BY:	Ahmed Tomizeh

SCALE:	1:200
DATE:	2024 - 02

Sheet(21) of (22) Sheets

Space Truss
General Structural Details.

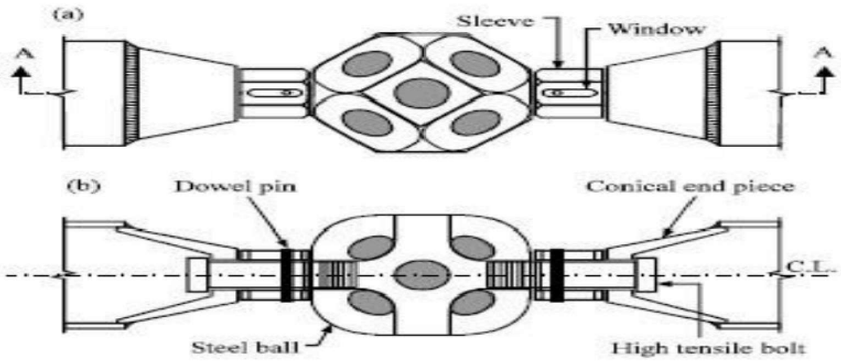

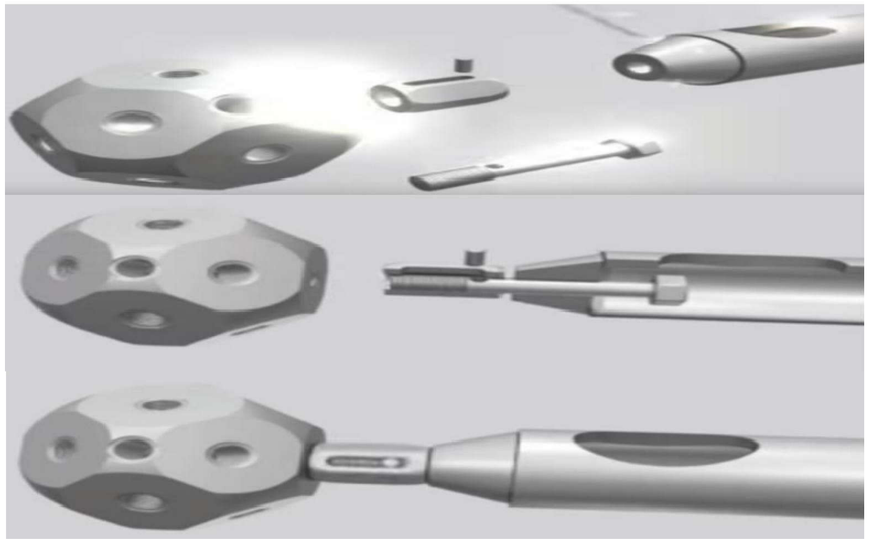

Space Truss Connections.

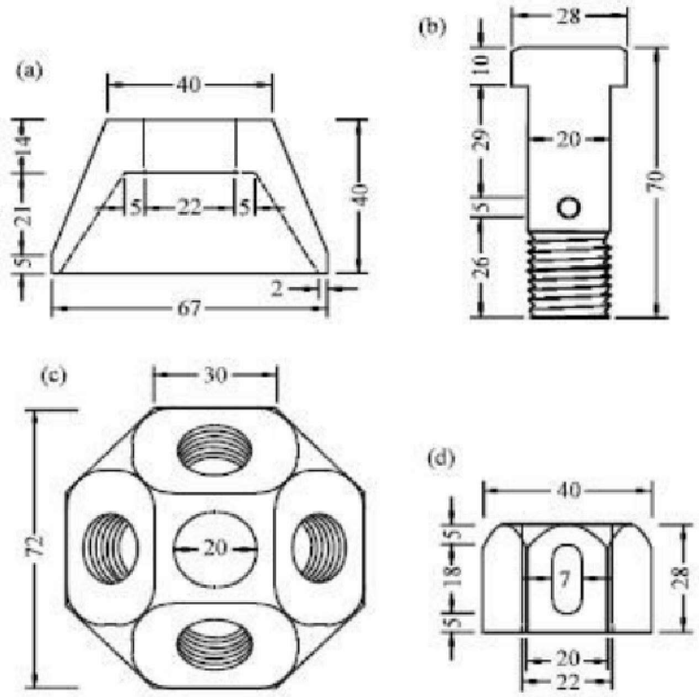

Node [Ball Bolt]

Loads: A- Dead Loads: 1-Self Weight.
2-Super-Imposed DL = 30kg/m2

B- Live Loads: 1-Live Load = 30 kg/m2.
2-Snow Load = 80 kg/m2

C- Wind Loads: Wind Speed is 35m/s.

Space Truss Connections.

P24-2023

PROJECT TITLE:

Al-Sheikh Saad Girls School External Works

REFERENCE :# ###

GENERAL REMARKS:

-1All Dimension In Meters .Unless Stated Other Wise .

-2All Levels are in Meters .

-3All level in Plans ,Sections &Elevations relevant to Zero Level .

-4Corridors Floor Finish is 12(cm)and for Rooms is 14(cm)and for Toilets 10(cm).

-5Any Unclear Data Shall be Clearfied by the Supervision Engineer .

-6All Windows have Protection Guards Fence .

-7All Staircase Tiles are Non -Slip Tiles.

-8All Emergency Doors are Smoke Proof and with Automatic Closuer and 2(Hour Fire-Rated)..

LEGEND &SAMBOLS:

Section Number
Details No & .Sheet No.
Finish Floor Level
Ren .Concrete Level
Level In Plans
Windows Number
Door Number

	Renifocement Concrete
	Shear Walls
	Plain Concrete
	Concrete Block
	Tiles
	Stone
R.C.L	Reni. Concrete Level
F.F.L.	Finish Floor Level
S.L.	Sea Level

REVISION HISTORY :

NO	DRAWINGS	DATE
REV01.		
REV02.		
REV03.		
REV04.		
REV05.		
REV06.		

CONTRACTING AUTHORITY :

Enabel -Belgian Development Agency

FUNDED BY:

Belgium partner in development

CONSULTANT:

ARAB ENGINEERS المهندسون العرب

Address : Hebron -Halhul -Main Street -Natsha Building
Telefax : +970 2 2251215 Tel: +970 2 2226361
Email : info@arabengineers-Pal.com
Website : www.arabengineers-Pal.com

SHEET NO.:	SHEET TITLE:
SD - 22	External Works Yard Shade [Space Truss System] STR .Details

DESIGNER:	Ahmed Salameh
CHECKED BY:	Jamal Salameh
DRAWN BY:	Ahmed Tomizeh

SCALE:	1:200
DATE:	2024 - 02

Sheet(22) of (22) Sheets

CONTRACTING AUTHORITY :

Enabel -Belgian Development Agency

FUNDED BY:

Belgium
partner in development

هذا المشروع بدعم من

الاتحاد الأوروبي

DETAILS HANDBOOK

Al-Sheikh Saad Girls School
External Works

DESIGNED BY:
Arab Engineers
المهندسون العرب
Halhoul - Main St.
Tel: +970 2 2226361 web site: www.arabengineers-Pal.com
Fax: +970 2 2251215 Email: info@arabengineers-Pal.com

2024

LEGEND

- Finish Floor Level (0.00)
- External Site Level (0.00)
- Elevation Level (0.00)
- Centerline Bubble (A2)
- Building Section Mark (Section Name, D, A105-04, Sheet No.)
- Door Label (Door Type, D03, G21, Detail Sheet No.)
- Window Label (Window Type, W01, F01, Detail Sheet No.)
- Room Label (G05, Room No., Offices, Room Name, A: 0.00 m², P:0.00, A: Room Area, P: Room Perimeter)
- Elevation Label (North Elevation, Elevation Name, A102, Sheet No., 1, Detail No.)
- Callout Section View (1, A111-01, Detail No., Sheet No.)
- Detail Callout (1, D01-01, Detail No., Sheet No.)
- Stair Label (No. of Risers, Step Width, 25R /16.5x30, Riser Height cm)
- Details Label (Division No., AD-501, Sheet No.)

FILL PATTERNS

- R.C. Column
- R.C. Slab
- Stone
- Mortar
- Plaster
- Plain Concrete
- Gravel
- Base Course
- Earth Fill
- Wood
- Hollow Block
- Steel
- Ceramic Tiles
- Thermal Insulation
- Water Proof

ABBREVIATIONS

V.O.S.	Verify on Site
A.F.F.	Above Floor Finish Level
R.C.L.	Reinforcement Concrete Level
F.F.L.	Finished Floor Level
N.L.	Natural Level
P.L.	Proposed Level
S.L.	Sea Level
E.J.	Expansion Joint
CONC.	Concrete
R.C.	Reinforced Concrete
W.P.	Water Proof
G.S.	Galvanized Steel
S.S.	Stainless Steel
VAR.	Variable values

SYMBOLS

- Water Cooler Device
- Emergency Exit
- Electrical Panels (Distribution Board)
- Fire Fighting Cabinet
- 3 K.G. HCFC Fire Extinguisher
- 2 K.G. Co_2 Fire Extinguisher

P24-2023

PROJECT TITLE:

Al-Sheikh Saad Girls School External Works

REFERENCE :#	###

GENERAL REMARKS:

LEGEND &SAMBOLS:

Section Number; Details No & Sheet No.; Finish Floor Level; Ren .Concrete Level; Level In Plans; Windows Number; Door Number

Reinforcement Concrete; Shear Walls; Plain Concrete; Concrete Block; Tiles; Stone; R.C.L. Reni. Concrete Level; F.F.L. Finish Floor Level; S.L. Sea Level

REVISION HISTORY :

NO	DRAWINGS	DATE
REV01.	Preliminary Design	January24
REV02.		
REV03.		
REV04.		
REV05.		
REV06.		

CONTRACTING AUTHORITY :

Enabel -Belgian Development Agency

FUNDED BY:

Belgium partner in development

CONSULTANT:

ARAB ENGINEERS المهندسون العرب

Address :	Hebron -Halhul -Main Street -Natsha Building		
Telefax :	2251215 2 970+	Tel:	2226361 2 970+
Email :	info@arabengineers-Pal.com		
Website :	www.arabengineers-Pal.com		

SHEET NO.:	SHEET TITLE:
AD-01	Notes and Legend

DESIGNER:	Arch .Malek Z .Murad
CHECKED BY:	
DRAWN BY:	Arch .Yesmain Raia
SCALE:	NTS
DATE:	29th January2024 /

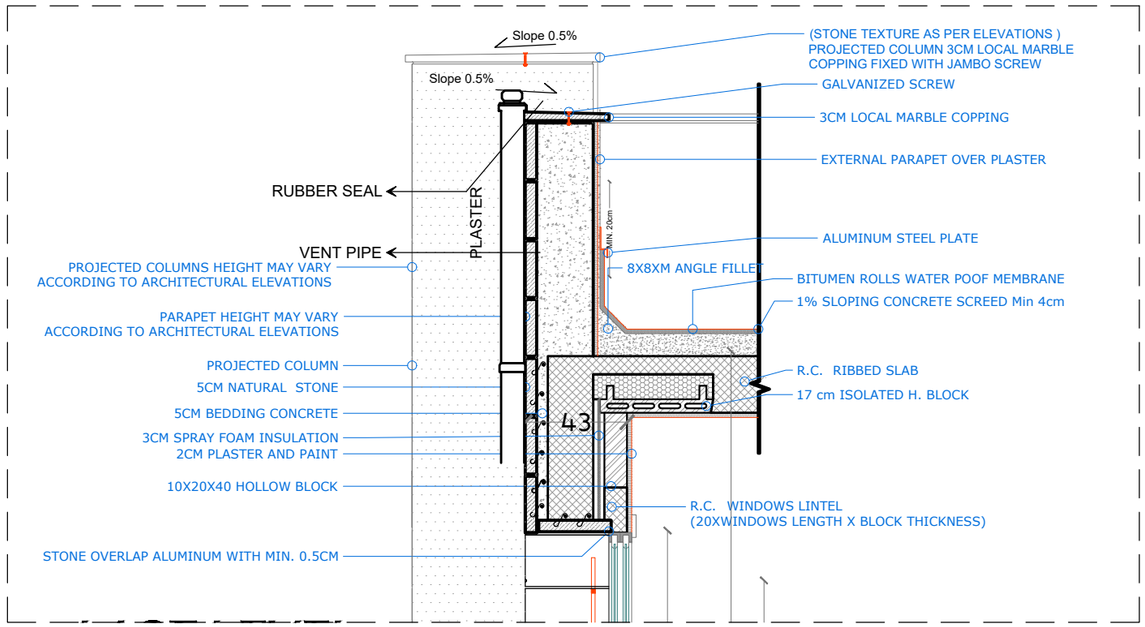

D2 Roof Parapet With Vent Pipe Detail
Scale 1:25

PARAPET HEIGHT MAY VARY
ACCORDING TO ARCHITECTURAL ELEVATIONS

THIS IS A TYPICAL DETAILS DIMENSIONS
MAY VARY ACCORDING TO WALL THICKNESS

30 CM ROOF PARAPET THICKNESS MAY VARY ACCEDING
TO B.O.Q. & ARCHITECTURAL DRAWINGS

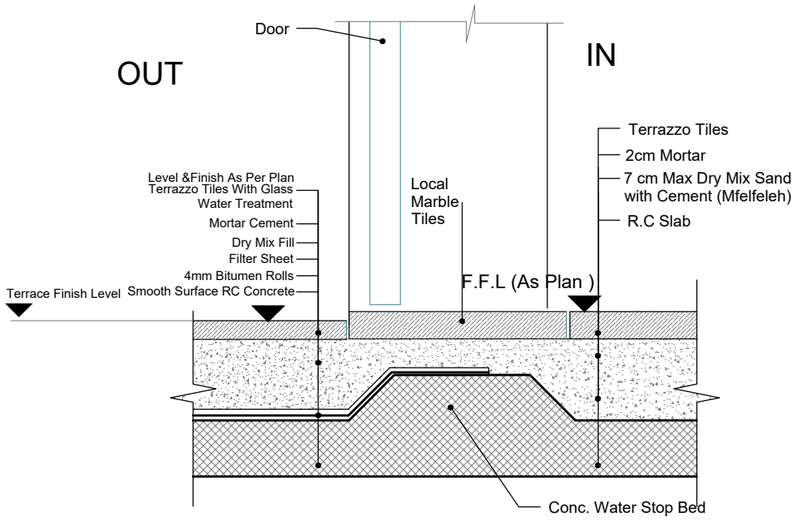

3 External Terraces Tiles Detail
1 : 5

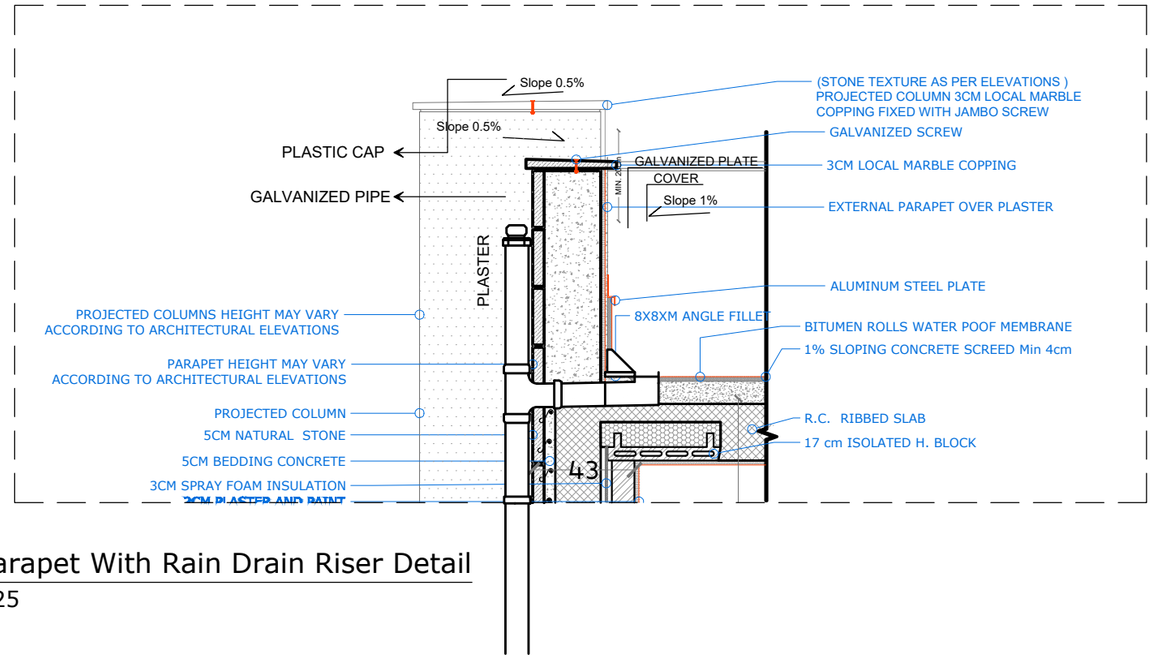

D1 Roof Parapet With Rain Drain Riser Detail
Scale 1:25

P24-2023

PROJECT TITLE:
Al-Sheikh Saad Girls School
External Works

REFERENCE :#	###

GENERAL REMARKS:

LEGEND &SAMBOLS:

Section Number
Details No & Sheet No.
Finish Floor Level
Ren .Concrete Level
Level In Plans
Windows Number
Door Number

Reinfocement Concrete
Shear Walls
Plain Concrete
Concrete Block
Tiles
Stone
R.C.L Reni. Concrete Level
F.F.L Finish Floor Level
S.L Sea Level

REVISION HISTORY :

NO	DRAWINGS	DATE
REV01.	Preliminary Design	January24
REV02.		
REV03.		
REV04.		
REV05.		
REV06.		

CONTRACTING AUTHORITY :
Enabel
Enabel -Belgian Development Agency

FUNDED BY:
Belgium
partner in development

CONSULTANT:
ARAB ENGINEERS
المهندسون العرب

Address :	Hebron -Halhul -Main Street -Natsha Building		
Telefax :	2251215 2 970+	Tel:	2226361 2 970+
Email :	info@arabengineers-Pal.com		
Website :	www.arabengineers-Pal.com		

SHEET NO.:	SHEET TITLE:
AD-101	Roof Insulation Typical Details

DESIGNER:	Arch .Malek Z .Murad
CHECKED BY:	
DRAWN BY:	Arch .Yesmain Raia

SCALE:	NTS
DATE:	29th January2024 /

All Steel Works Shall Be Galvanized Steel

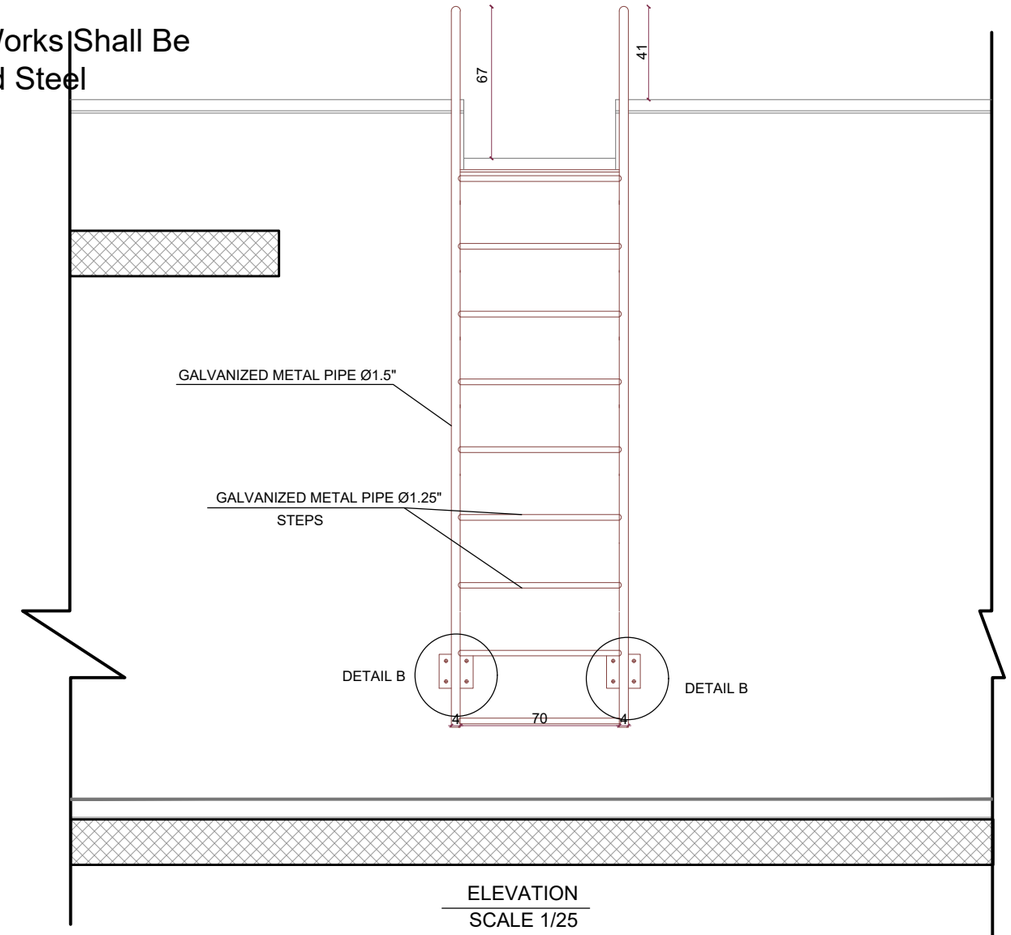

ELEVATION
SCALE 1/25

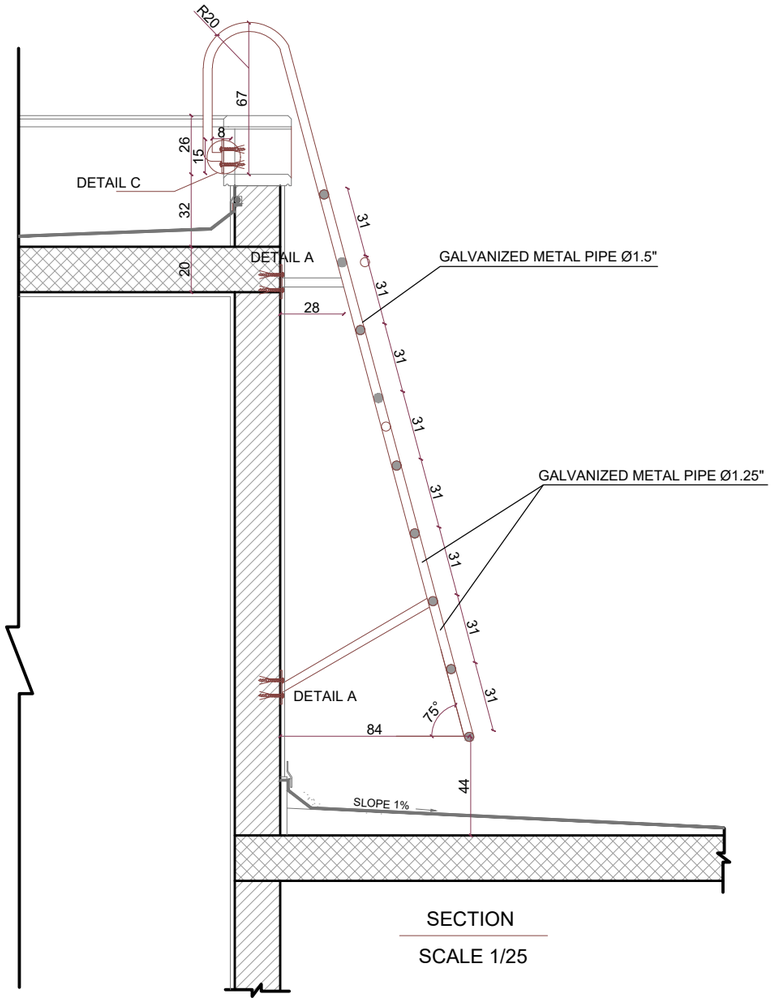

SECTION
SCALE 1/25

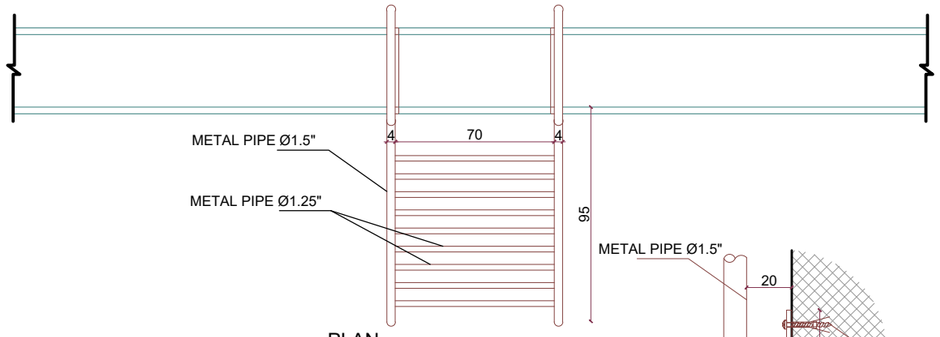

PLAN
SCALE 1.25

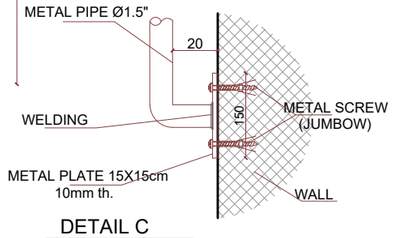

DETAIL C
SCALE 1/10

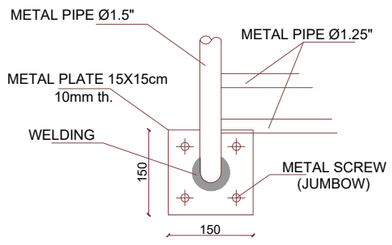

DETAIL B
SCALE 1/10

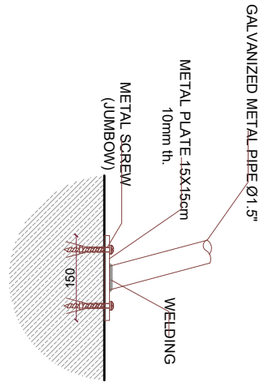

DETAIL A
SCALE 1/10

D1 Typical Details For Heavy Duty Steel Ladder
Scale NTS

P24-2023

PROJECT TITLE:

Al-Sheikh Saad Girls School External Works

REFERENCE :#	###

GENERAL REMARKS:

LEGEND &SAMBOLS:

Section Number
Details No.& .Sheet No.
Finish Floor Level
Ren .Concrete Level
Level In Plans
Windows Number
Door Number

Reinfocement Concrete
Shear Walls
Plain Concrete
Concrete Block
Tiles
Stone
R.C.L Reni. Concrete Level
F.F.L Finish Floor Level
S.L Sea Level

REVISION HISTORY :

NO	DRAWINGS	DATE
REV01.	Preliminary Design	January24
REV02.		
REV03.		
REV04.		
REV05.		
REV06.		

CONTRACTING AUTHORITY :

Enabel -Belgian Development Agency

FUNDED BY:

Belgium partner in development

CONSULTANT:

ARAB ENGINEERS المهندسون العرب

Address :	Hebron -Halhul -Main Street -Natsha Building		
Telefax :	2251215 2 970+	Tel:	2226361 2 970+
Email :	info@arabengineers-Pal.com		
Website :	www.arabengineers-Pal.com		

SHEET NO.:	SHEET TITLE:
AD-102	Steel Ladder at Roof Typical Details

DESIGNER:	Arch .Malek Z .Murad
CHECKED BY:	
DRAWN BY:	Arch .Yesmain Raia
SCALE:	NTS
DATE:	29th January2024 /

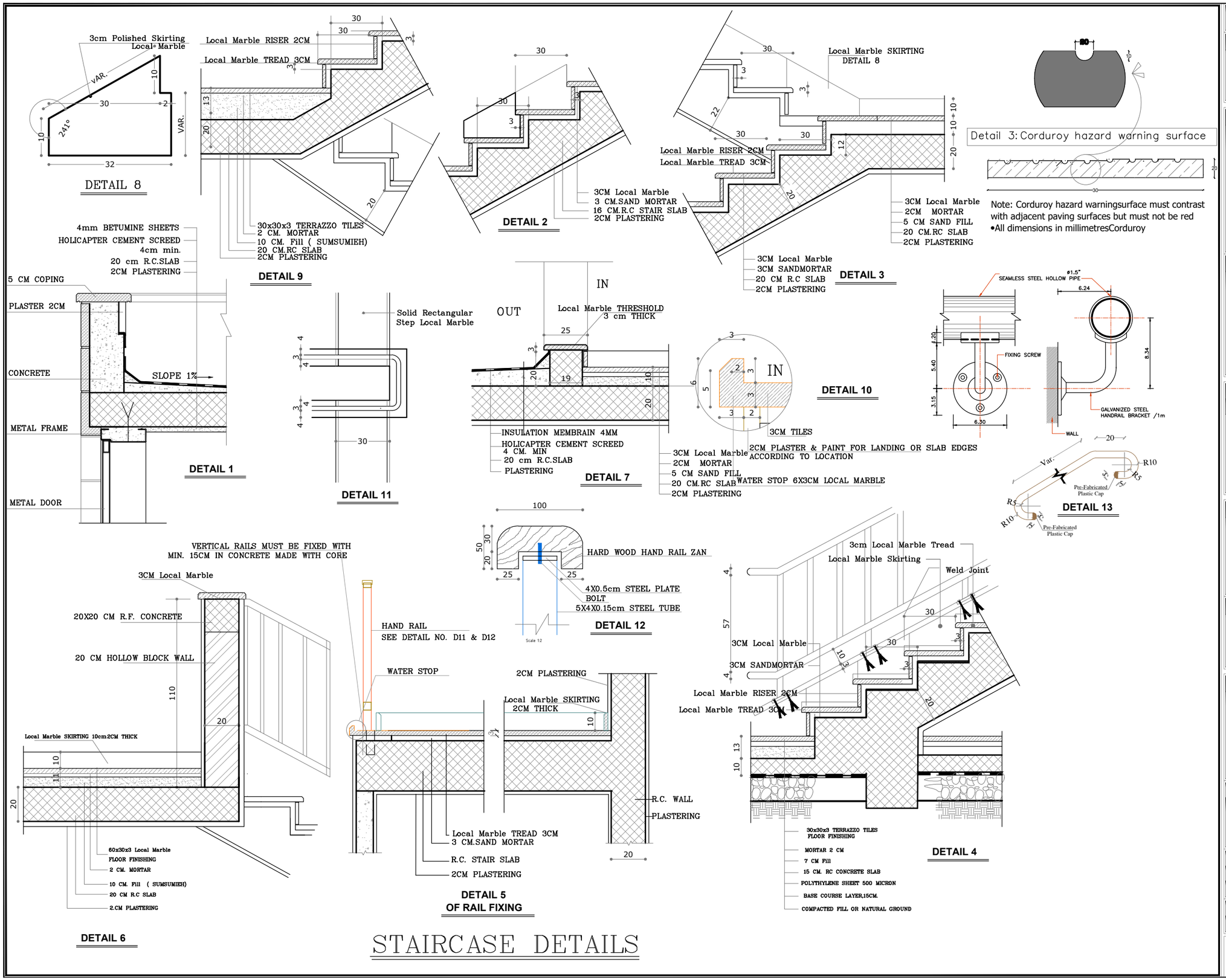

STAIRCASE DETAILS

P24-2023

PROJECT TITLE:

Al-Sheikh Saad Girls School External Works

REFERENCE :#	###

GENERAL REMARKS:

LEGEND &SAMBOLS:

Section Number	Reinfocement Concrete
Details No & Sheet No.	Shear Walls
Finish Floor Level	Plain Concrete
Ren .Concrete Level	Concrete Block
Level In Plans	Tiles
Windows Number	Stone
Door Number	R.C.L Rens. Concrete Level
	F.F.L Finish Floor Level
	S.L Sea Level

REVISION HISTORY :

NO	DRAWINGS	DATE
REV01.	Preliminary Design	January24
REV02.		
REV03.		
REV04.		
REV05.		
REV06.		

CONTRACTING AUTHORITY :

Enabel -Belgian Development Agency

FUNDED BY:

Belgium partner in development

CONSULTANT:

ARAB ENGINEERS المهندسون العرب

Address :	Hebron -Halhul -Main Street -Natsha Building		
Telefax :	2251215 2 970+	Tel:	2226361 2 970+
Email :	info@arabengineers-Pal.com		
Website :	www.arabengineers-Pal.com		

SHEET NO.:	SHEET TITLE:
AD-103	Internal Staircase Typical Details

DESIGNER:	Arch .Malek Z .Murad
CHECKED BY:	
DRAWN BY:	Arch .Yesmain Raia
SCALE:	NTS
DATE:	29th January2024 /

NOTES:

A) concrete grade B20

B) Slump 150 mm.

A) Max Aggregate size 12mm.

1 – تفصيلة تبين التقاء جدران الطوب مع العناصر الخرسانية المسلحة والكشفة الخرسانية المسلحة في الجدران التي لا تحتوي على فتحات في حال كان طول جدار الطوب (L<3.0)

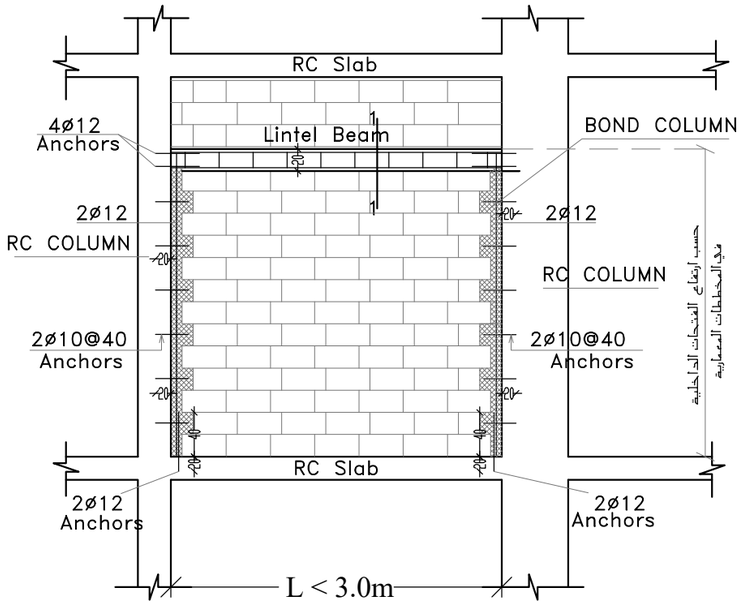

2 – تفصيلة تبين التقاء جدران الطوب مع العناصر الخرسانية المسلحة والكشفة الخرسانية المسلحة في الجدران التي لا تحتوي على فتحات في حال كان طول جدار الطوب (3.0<L<5.0)

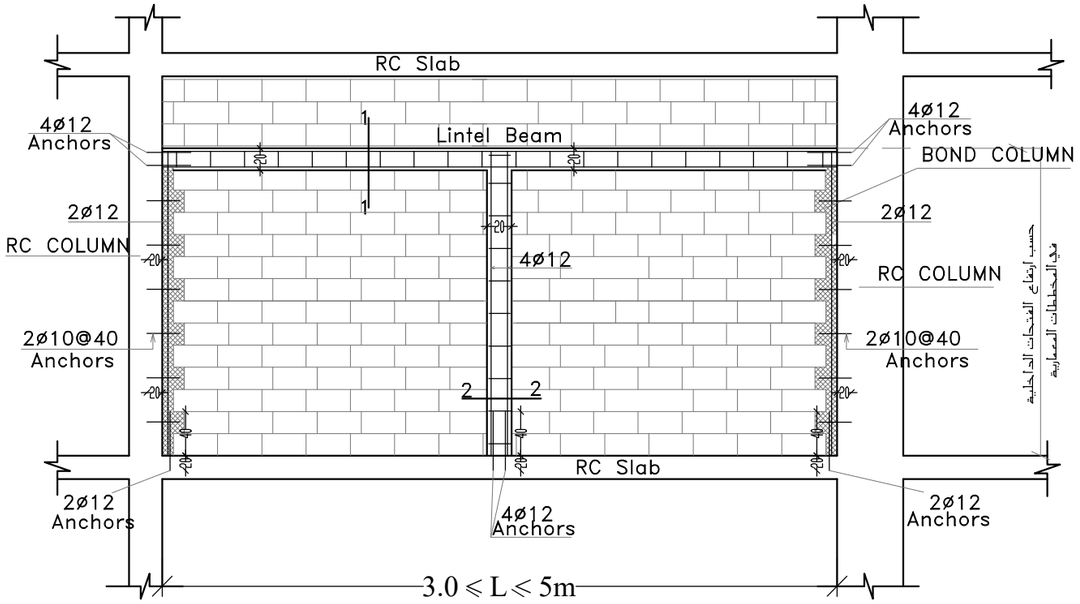

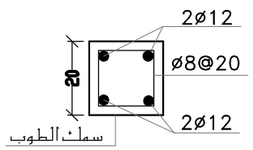

Section (1–1)

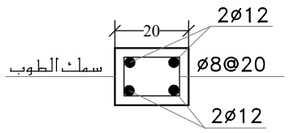

Section (2–2)

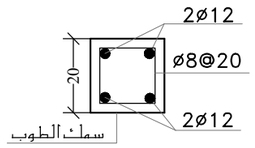

Section (1–1)

NOTES:

A) concrete grade B20

B) Slump 150 mm.

A) Max Aggregate size 12mm.

P24-2023

PROJECT TITLE:

Al-Sheikh Saad Girls School External Works

REFERENCE :#	###

GENERAL REMARKS:

LEGEND &SAMBOLS:

Section Number
Details No & .Sheet No.
Finish Floor Level
Ren .Concrete Level
Level In Plans
Windows Number
Door Number

Reinfocement Concrete
Shear Walls
Plain Concrete
Concrete Block
Tiles
Stone
R.C.L Reni. Concrete Level
F.F.L Finish Floor Level
S.L Sea Level

REVISION HISTORY :

NO	DRAWINGS	DATE
REV01.	Preliminary Design	January24
REV02.		
REV03.		
REV04.		
REV05.		
REV06.		

CONTRACTING AUTHORITY :

Enabel -Belgian Development Agency

FUNDED BY:

Belgium partner in development

CONSULTANT:

ARAB ENGINEERS المهندسون العرب

Address :	Hebron -Halhul -Main Street -Natsha Building		
Telefax :	2251215 2 970+	Tel:	2226361 2 970+
Email :	info@arabengineers-Pal.com		
Website :	www.arabengineers-Pal.com		

SHEET NO.:	SHEET TITLE:
AD-104	Internal Block Partitions Typical Details

DESIGNER:	Arch .Malek Z .Murad
CHECKED BY:	
DRAWN BY:	Arch .Yesmain Raia
SCALE:	NTS
DATE:	29th January2024 /

5- تفصيلة تبيين التقاء جدران الطوب مع العناصر الخرسانية المسلحة
والكشفة الخرسانية المسلحة في حال عدم وجود جسور مدلى تصل الى الشبابيك

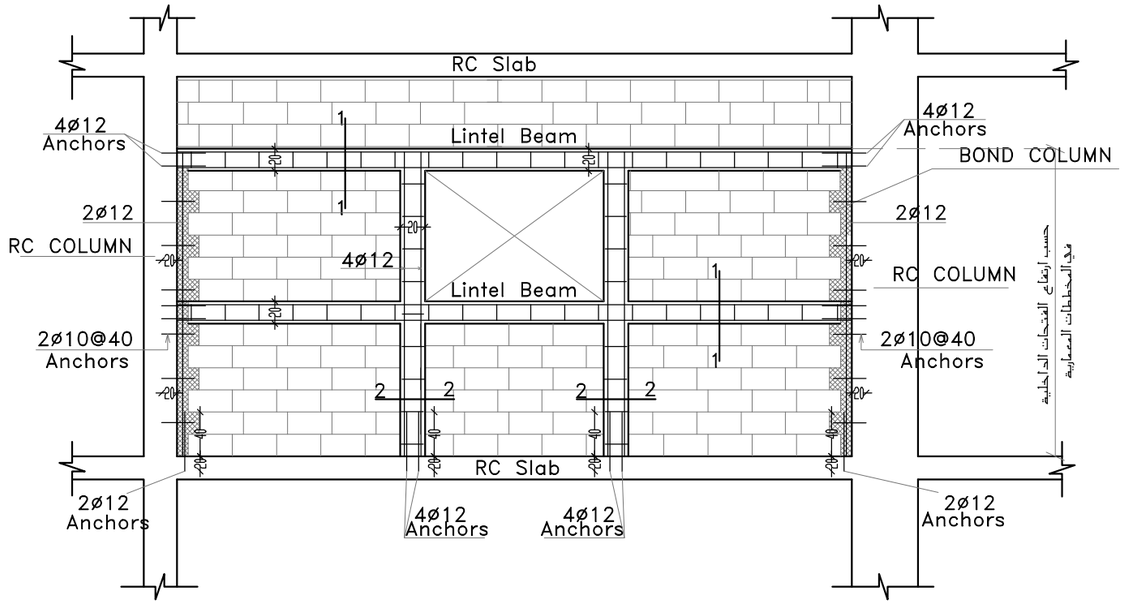

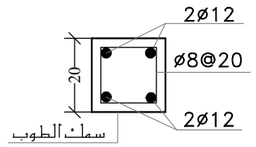

Section (1-1)

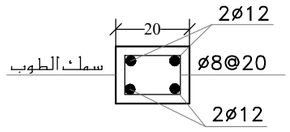

Section (2-2)

NOTES:

A) concrete grade B20

B) Slump 150 mm.

A) Max Aggregate size 12mm.

6- تفصيلة تبيين الكشفات الخرسانية المسلحة فوق الفتحات في جدران الطوب

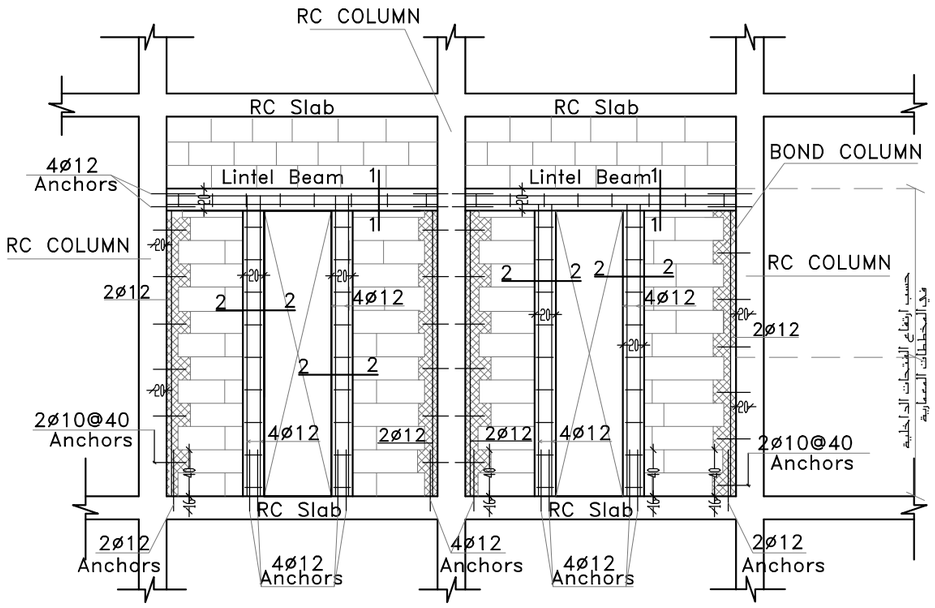

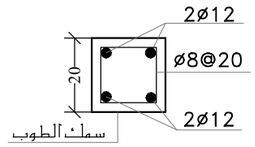

Section (1-1)

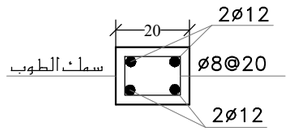

Section (2-2)

NOTES:

A) concrete grade B20

B) Slump 150 mm.

A) Max Aggregate size 12mm.

P24-2023

PROJECT TITLE:

Al-Sheikh Saad Girls School External Works

REFERENCE :#	###

GENERAL REMARKS:

LEGEND &SAMBOLS:

Section Number
Details No & Sheet No.
Finish Floor Level
Ren .Concrete Level
Level In Plans
Windows Number
Door Number

Reinfocement Concrete
Shear Walls
Plain Concrete
Concrete Block
Tiles
Stone
R.C.L Reni. Concrete Level
F.F.L Finish Floor Level
S.L Sea Level

REVISION HISTORY :

NO	DRAWINGS	DATE
REV01.	Preliminary Design	January24
REV02.		
REV03.		
REV04.		
REV05.		
REV06.		

CONTRACTING AUTHORITY :

Enabel -Belgian Development Agency

FUNDED BY:

Belgium partner in development

CONSULTANT:

ARAB ENGINEERS المهندسون العرب

Address :	Hebron -Halhul -Main Street -Natsha Building		
Telefax :	2251215 2 970+	Tel:	2226361 2 970+
Email :	info@arabengineers-Pal.com		
Website :	www.arabengineers-Pal.com		

SHEET NO.:	SHEET TITLE:
AD-105	Internal Block Partitions Typical Details

DESIGNER:	Arch .Malek Z .Murad
CHECKED BY:	
DRAWN BY:	Arch .Yesmain Raia
SCALE:	NTS
DATE:	29th January2024 /

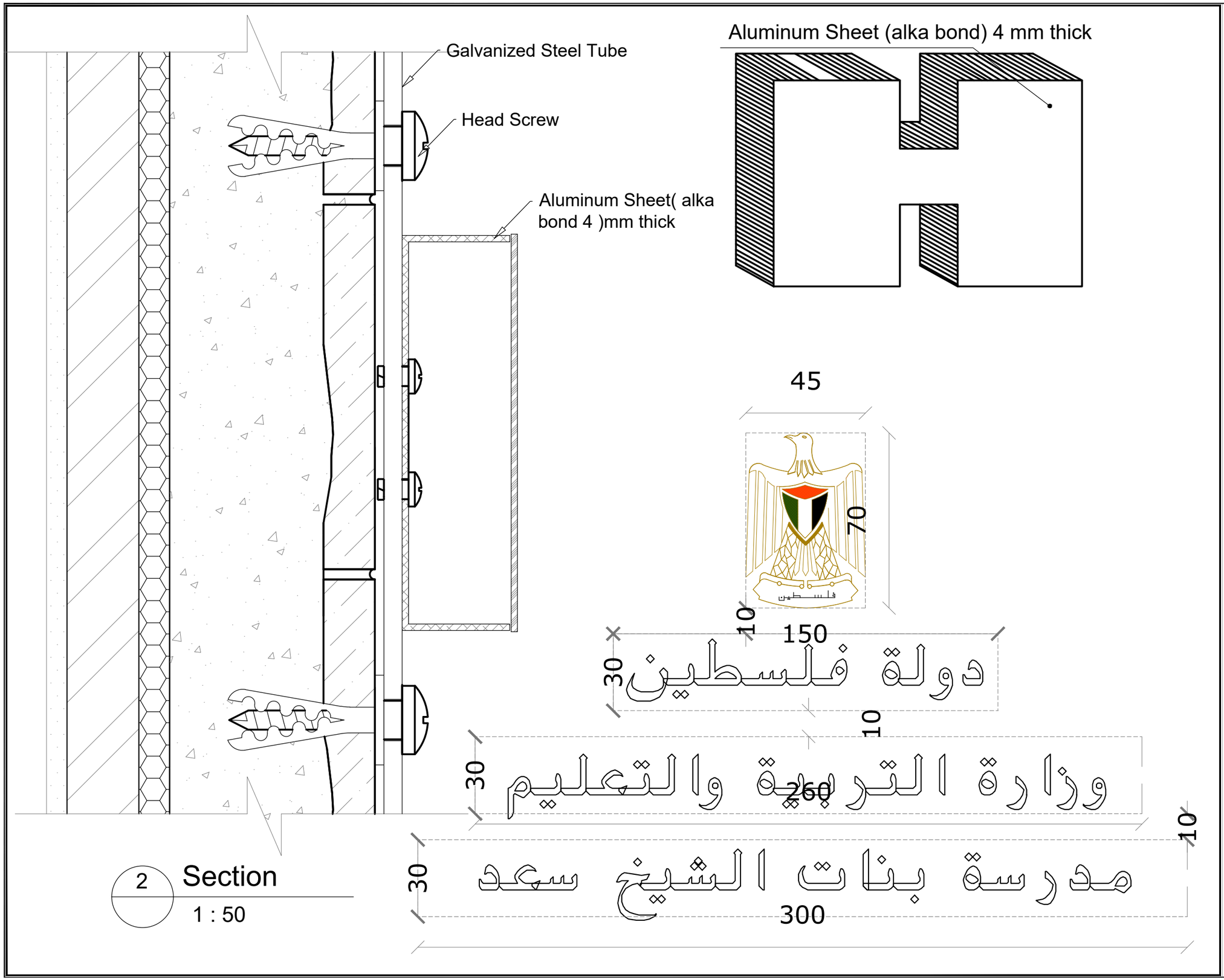

P24-2023

PROJECT TITLE:

Al-Sheikh Saad Girls School External Works

REFERENCE :#	###

GENERAL REMARKS:

LEGEND &SAMBOLS:

- Section Number
- Details No.& .Sheet No.
- Finish Floor Level
- Ren .Concrete Level
- Level In Plans
- Windows Number
- Door Number

	Reinfocement Concrete
	Shear Walls
	Plain Concrete
	Concrete Block
	Tiles
	Stone
R.C.L	Reni. Concrete Level
F.F.L	Finish Floor Level
S.L	Sea Level

REVISION HISTORY :

NO	DRAWINGS	DATE
REV01.	Preliminary Design	January24
REV02.		
REV03.		
REV04.		
REV05.		
REV06.		

CONTRACTING AUTHORITY :

Enabel

Enabel -Belgian Development Agency

FUNDED BY:

Belgium
partner in development

CONSULTANT:

ARAB ENGINEERS
المهندسون العرب

Address :	Hebron -Halhul -Main Street -Natsha Building		
Telefax :	2251215 2 970+	Tel:	2226361 2 970+
Email :	info@arabengineers-Pal.com		
Website :	www.arabengineers-Pal.com		

SHEET NO.:	SHEET TITLE:
AD-106	School Project Title Typical Details

DESIGNER:	Arch .Malek Z .Murad
CHECKED BY:	
DRAWN BY:	Arch .Yesmain Raia

SCALE:	NTS
DATE:	29th January2024 /

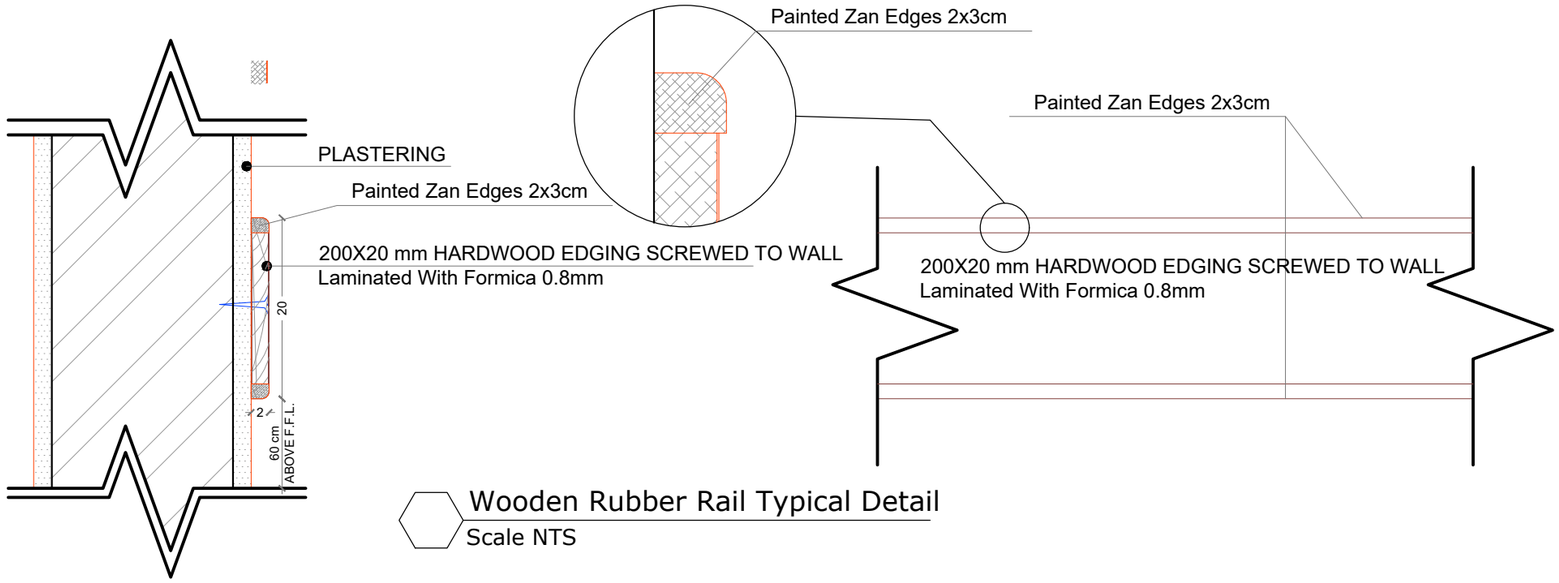

Wooden Rubber Rail Typical Detail

Scale NTS

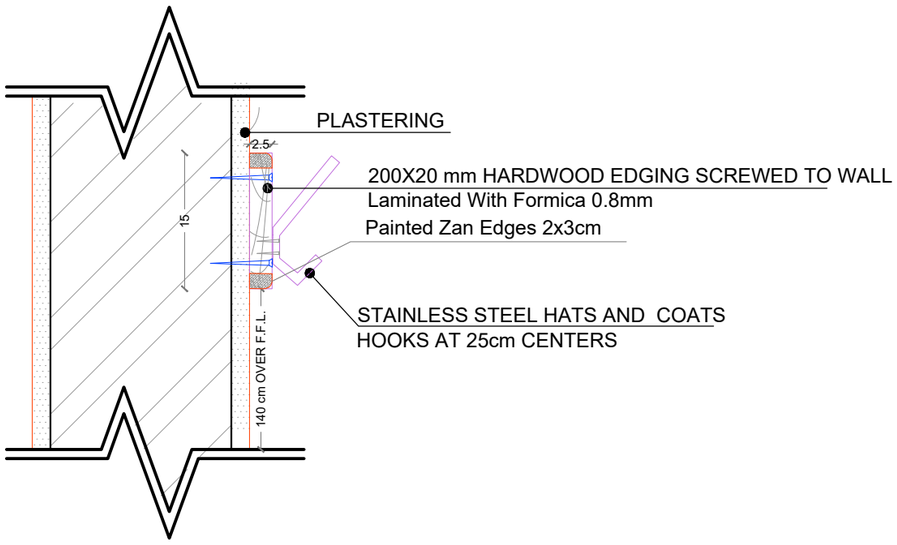

Coats Hanger Typical Detail

Scale NTS

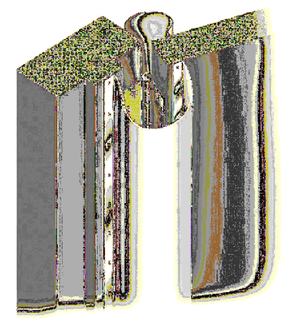

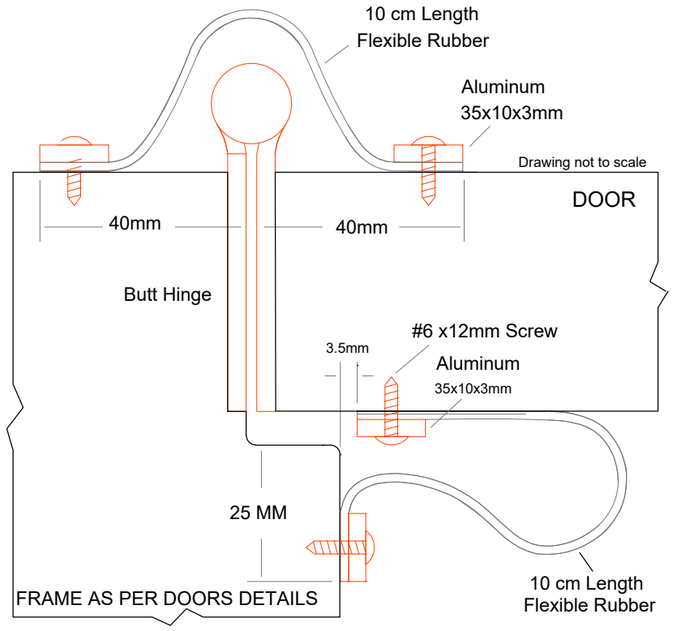

Door Finger Guard (Finger Protector)

Finger-Guard

Hand and finger protection for heavy-duty industrial applications, child care, school safety Aluminum and flexible rubber in grey color.

(150mm wide) For door opening up to 90
(200mm wide) For door opening up to 180

P24-2023

PROJECT TITLE:

Al-Sheikh Saad Girls School External Works

REFERENCE :# ###

GENERAL REMARKS:

LEGEND &SAMBOLS:

Section Number
Details No.& Sheet No.
Finish Floor Level
Ren .Concrete Level
Level In Plans
Windows Number
Door Number

Reinfocement Concrete
Shear Walls
Plain Concrete
Concrete Block
Tiles
Stone
R.C.L Reni. Concrete Level
F.F.L Finish Floor Level
S.L Sea Level

REVISION HISTORY :

NO	DRAWINGS	DATE
REV01.	Preliminary Design	January24
REV02.		
REV03.		
REV04.		
REV05.		
REV06.		

CONTRACTING AUTHORITY :

Enabel -Belgian Development Agency

FUNDED BY:

Belgium partner in development

CONSULTANT:

ARAB ENGINEERS المهندسون العرب

Address : Hebron -Halhul -Main Street -Natsha Building
Telefax : 2251215 2 970+ Tel: 2226361 2 970+
Email : info@arabengineers-Pal.com
Website : www.arabengineers-Pal.com

SHEET NO.:	SHEET TITLE:
AD-107	Rubbing Rails and Coats Hangers Typical Details

DESIGNER:	Arch .Malek Z .Murad
CHECKED BY:	
DRAWN BY:	Arch .Yesmain Raia
SCALE:	NTS
DATE:	29th January2024 /

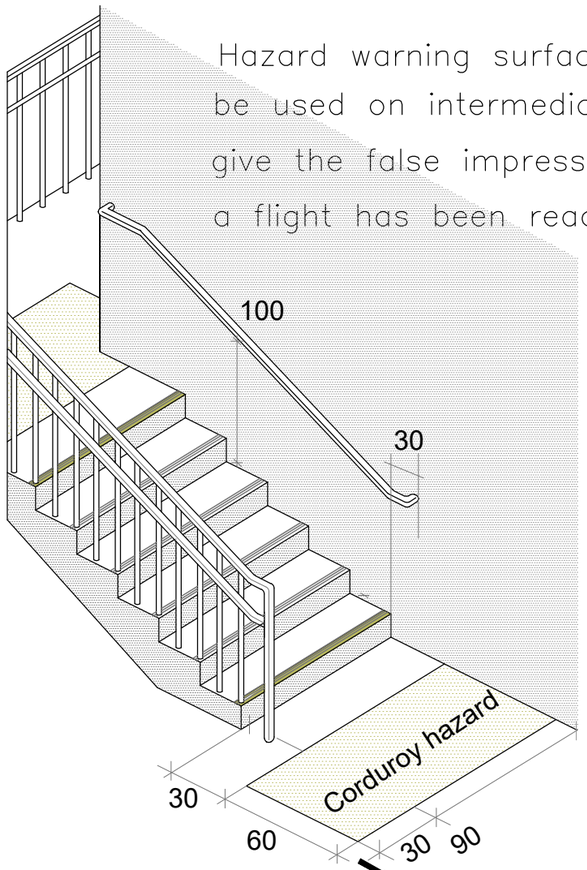

Hazard warning surfacing should not generally be used on intermediate landings as this can give the false impression that the end of a flight has been reached.

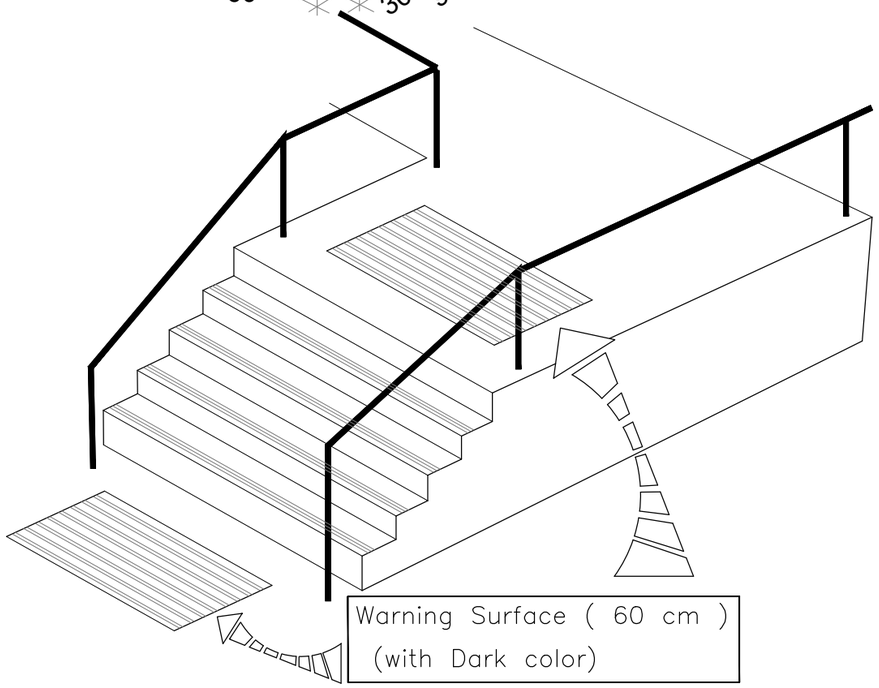

External Ramp

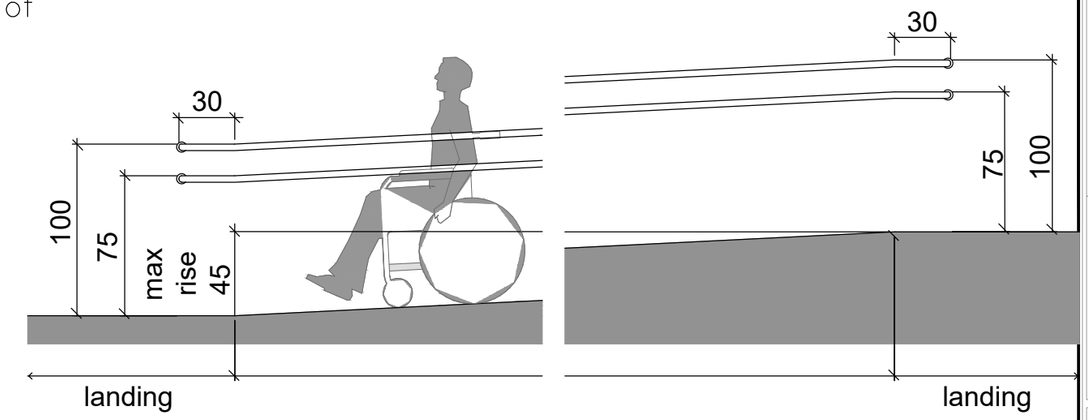

Handrail details for Ramps.

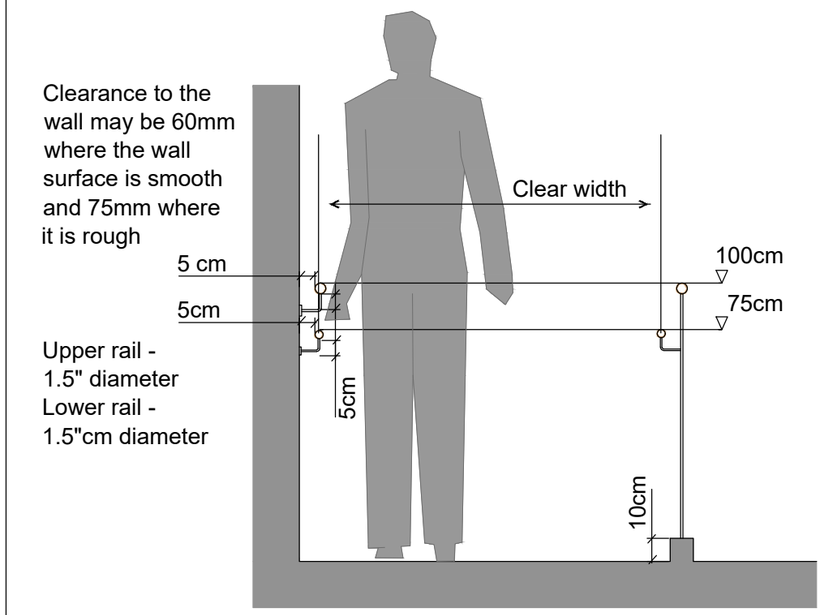

P24-2023

PROJECT TITLE:

Al-Sheikh Saad Girls School External Works

REFERENCE :# ###

GENERAL REMARKS:

LEGEND &SAMBOLS:

Section Number
Details No.& .Sheet No.
Finish Floor Level
Ren .Concrete Level
Level In Plans
Windows Number
Door Number

Reinfocement Concrete
Shear Walls
Plain Concrete
Concrete Block
Tiles
Stone
R.C.L Reni. Concrete Level
F.F.L Finish Floor Level
S.L Sea Level

REVISION HISTORY :

NO	DRAWINGS	DATE
REV01.	Preliminary Design	January24
REV02.		
REV03.		
REV04.		
REV05.		
REV06.		

CONTRACTING AUTHORITY :

Enabel -Belgian Development Agency

FUNDED BY:

Belgium partner in development

CONSULTANT:

ARAB ENGINEERS المهندسون العرب

Address : Hebron -Halhul -Main Street -Natsha Building
Telefax : 2251215 2 970+ Tel: 2226361 2 970+
Email : info@arabengineers-Pal.com
Website : www.arabengineers-Pal.com

SHEET NO.:	SHEET TITLE:
AD-108	Low Vision Aid Typical Details

DESIGNER:	Arch .Malek Z .Murad
CHECKED BY:	
DRAWN BY:	Arch .Yesmain Raia
SCALE:	NTS
DATE:	29th January2024 /

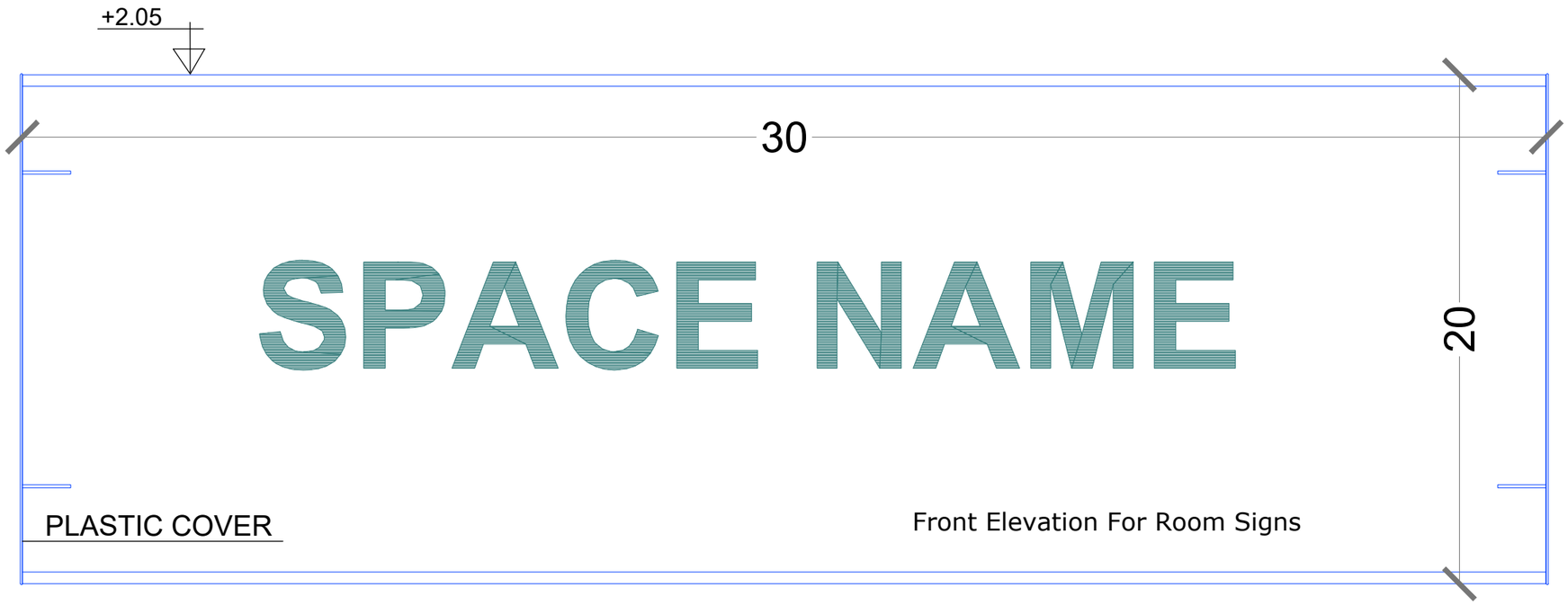

D1 Front Elevation For Room Signs
Scale NTS

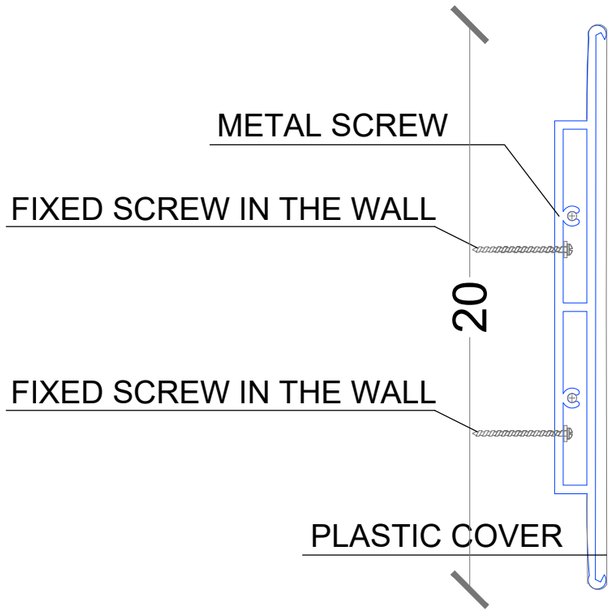

D2 Side Elevation For Room Signs
Scale NTS

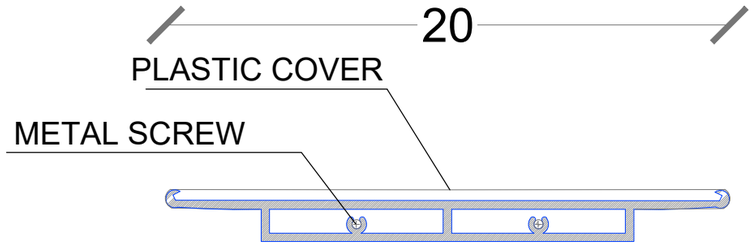

D3 Typical Section For Room Signs
Scale NTS

P24-2023

PROJECT TITLE:

Al-Sheikh Saad Girls School External Works

REFERENCE :#	###

GENERAL REMARKS:

LEGEND &SAMBOLS:

Section Number	Reinfocement Concrete
Details No.& .Sheet No.	Shear Walls
Finish Floor Level	Plain Concrete
Ren .Concrete Level	Concrete Block
Level In Plans	Tiles
Windows Number	Stone
Door Number	R.C.L Reni. Concrete Level
	F.F.L Finish Floor Level
	S.L Sea Level

REVISION HISTORY :

NO	DRAWINGS	DATE
REV01.	Preliminary Design	January24
REV02.		
REV03.		
REV04.		
REV05.		
REV06.		

CONTRACTING AUTHORITY :

Enabel -Belgian Development Agency

FUNDED BY:

Belgium partner in development

CONSULTANT:

ARAB ENGINEERS المهندسون العرب

Address :	Hebron -Halhul -Main Street -Natsha Building		
Telefax :	2251215 2 970+	Tel:	2226361 2 970+
Email :	info@arabengineers-Pal.com		
Website :	www.arabengineers-Pal.com		

SHEET NO.:	SHEET TITLE:
AD-109	Internal Room Signs Typical Details

DESIGNER:	Arch .Malek Z .Murad
CHECKED BY:	
DRAWN BY:	Arch .Yesmain Raia

SCALE:	NTS
DATE:	29th January2024 /

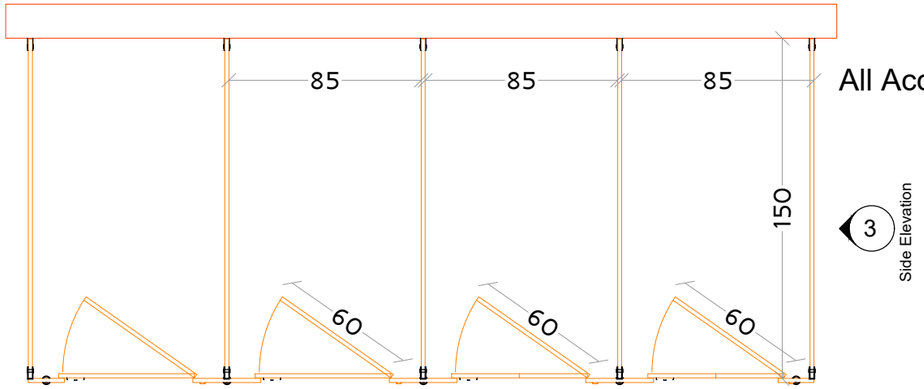

All Accessories Shall be Stainless Steel

Plan
1 : 50

2
Front Elevation

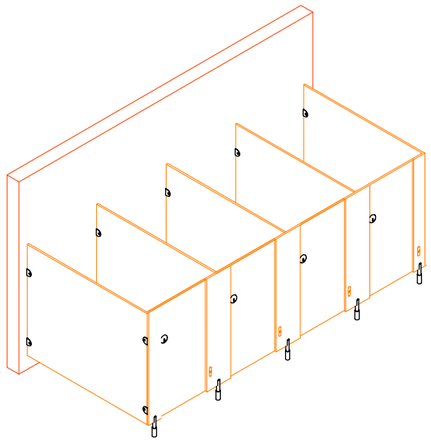

3D View

Partition to be Fixed on Floor and Walls

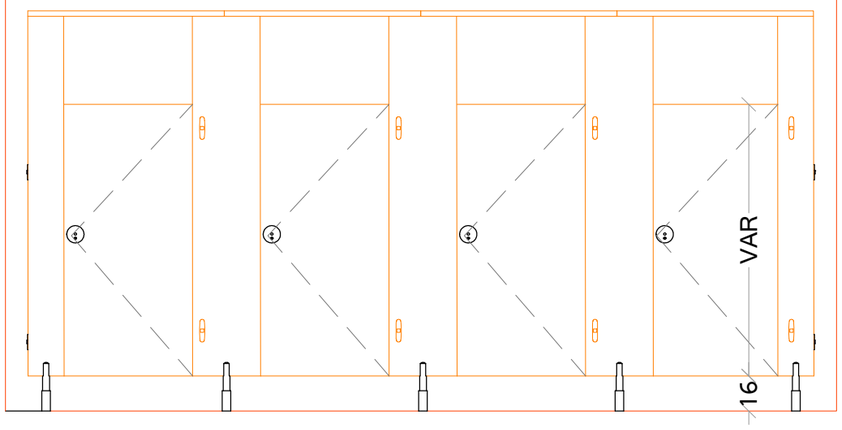

Front Elevation

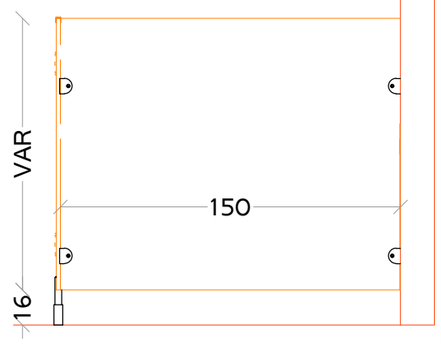

Side Elevation
1 : 50

This is A Typical Details and Number of Toilets and Spaces According to Floor Plans

P24-2023

PROJECT TITLE:

Al-Sheikh Saad Girls School External Works

REFERENCE :#	###

GENERAL REMARKS:

LEGEND &SAMBOLS:

Section Number
Details No & Sheet No.
Finish Floor Level
Ren .Concrete Level
Level In Plans
Windows Number
Door Number

Reinfocement Concrete
Shear Walls
Plain Concrete
Concrete Block
Tiles
Stone
R.C.L Reni. Concrete Level
F.F.L Finish Floor Level
S.L Sea Level

REVISION HISTORY :

NO	DRAWINGS	DATE
REV01.	Preliminary Design	January24
REV02.		
REV03.		
REV04.		
REV05.		
REV06.		

CONTRACTING AUTHORITY :

Enabel -Belgian Development Agency

FUNDED BY:

Belgium partner in development

CONSULTANT:

ARAB ENGINEERS المهندسون العرب

Address :	Hebron -Halhul -Main Street -Natsha Building		
Telefax :	2251215 2 970+	Tel:	2226361 2 970+
Email :	info@arabengineers-Pal.com		
Website :	www.arabengineers-Pal.com		

SHEET NO.:	SHEET TITLE:
AD-110	Phenolic Partition (HPL) Typical Details

DESIGNER:	Arch .Malek Z .Murad
CHECKED BY:	
DRAWN BY:	Arch .Yesmain Raia
SCALE:	NTS
DATE:	29th January2024 /

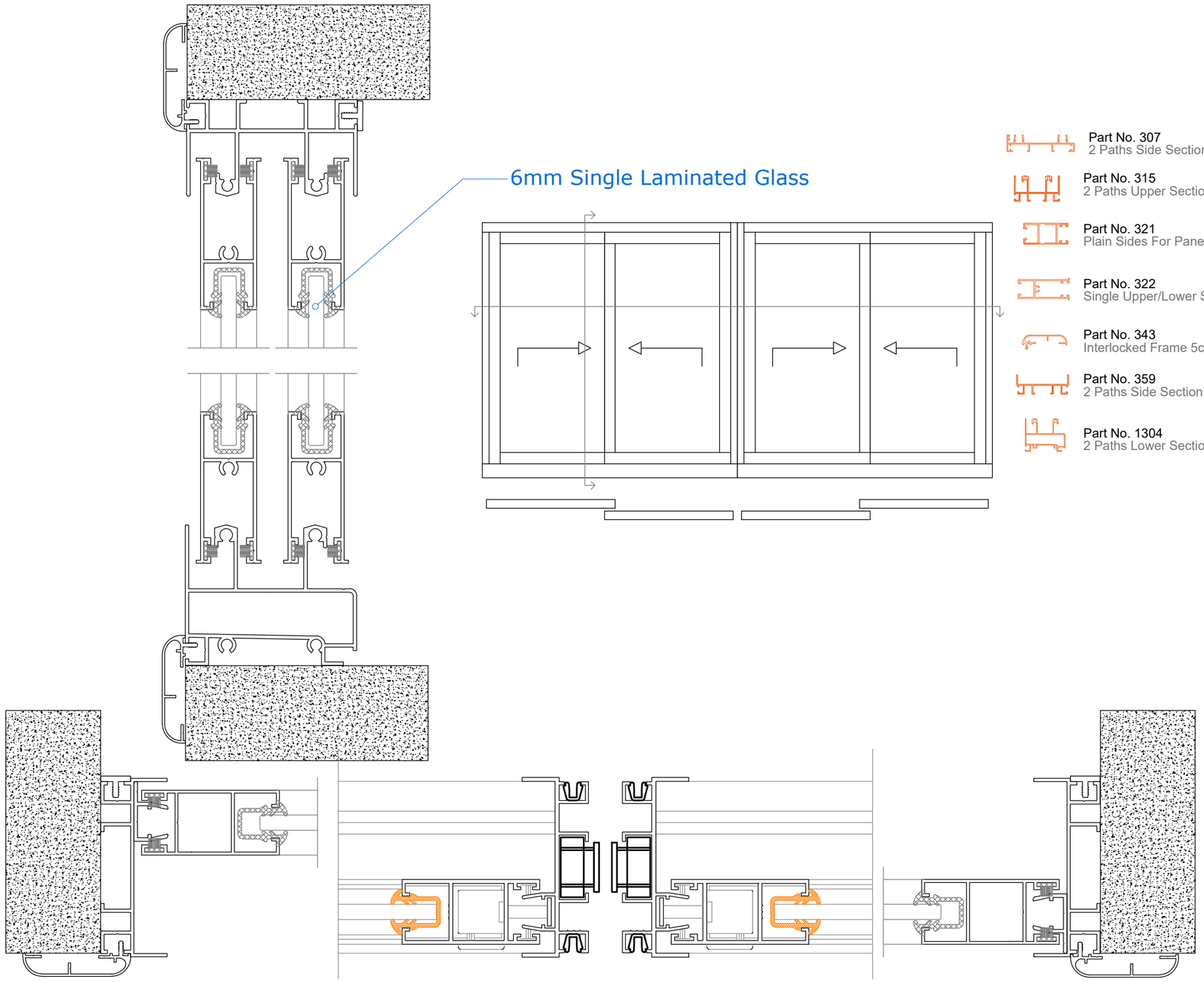

P24-2023

PROJECT TITLE:

Al-Sheikh Saad Girls School External Works

REFERENCE :#	###

GENERAL REMARKS:

LEGEND &SAMBOLS:

- Section Number
- Details No & Sheet No.
- Finish Floor Level
- Ren .Concrete Level
- Level In Plans
- Windows Number
- Door Number

- Reinfocement Concrete
- Shear Walls
- Plain Concrete
- Concrete Block
- Tiles
- Stone
- R.C.L Reni. Concrete Level
- F.F.L Finish Floor Level
- S.L Sea Level

REVISION HISTORY :

NO	DRAWINGS	DATE
REV01.	Preliminary Design	January24
REV02.		
REV03.		
REV04.		
REV05.		
REV06.		

CONTRACTING AUTHORITY :

Enabel

Enabel -Belgian Development Agency

FUNDED BY:

Belgium
partner in development

CONSULTANT:

ARAB ENGINEERS
المهندسون العرب

Address :	Hebron -Halhul -Main Street -Natsha Building		
Telefax :	2251215 2 970+	Tel:	2226361 2 970+
Email :	info@arabengineers-Pal.com		
Website :	www.arabengineers-Pal.com		

SHEET NO.:	SHEET TITLE:
AD-201	Internal Windows Typical Details

DESIGNER:	Arch .Malek Z .Murad
CHECKED BY:	
DRAWN BY:	Arch .Yesmain Raia

SCALE:	NTS
DATE:	29th January2024 /

Part No. 300
3 Paths Section

Part No. 301
3 Paths Upper Guide Section

Part No. 306
3 Paths Side Guide Section

Part No. 308
3 Paths Side Guide Section

Part No. 320
Side Guide Section With Single Anchor

Part No. 322
Single Upper/Lower Side Section

Part No. 324
Single Medial Section (Klboosh)

Part No. 327
Single Section for Panels With Rubber

Part No. 343
Interlocked Frame 5cm (Wide)

Part No. 345
Sieve Chair Section

Part No. 351
Ordinary Frame 5.85

Part No. 354
Single (T) Shaped Section

Part No. 365
Section 7700 / 4550

Typical Window Section Details For External Windows

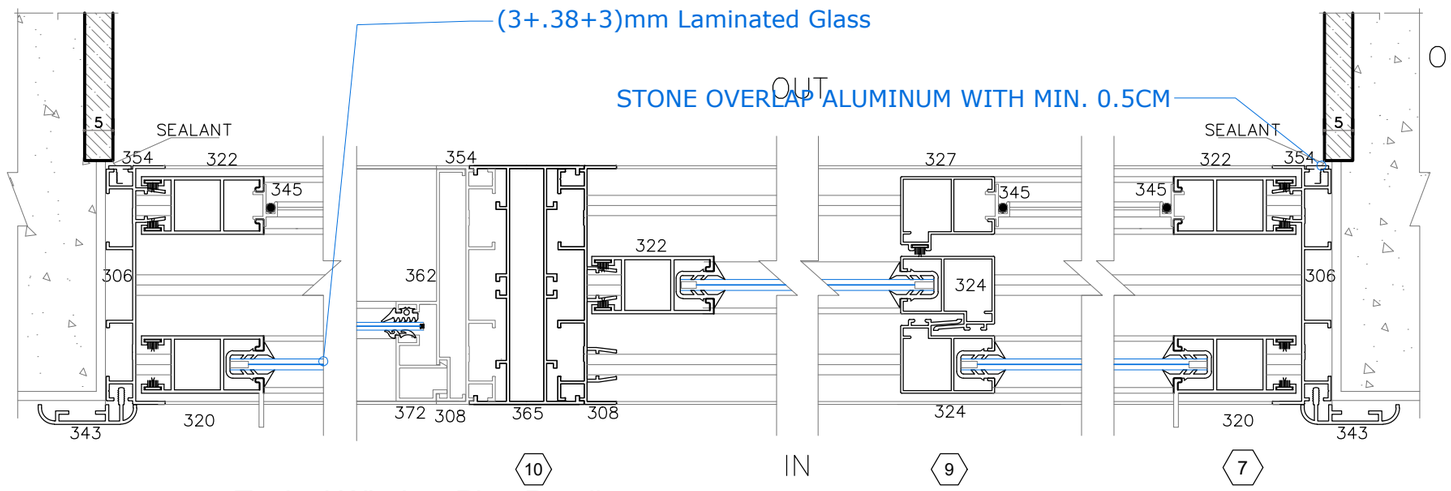

Typical Window Plan Details For External Windows

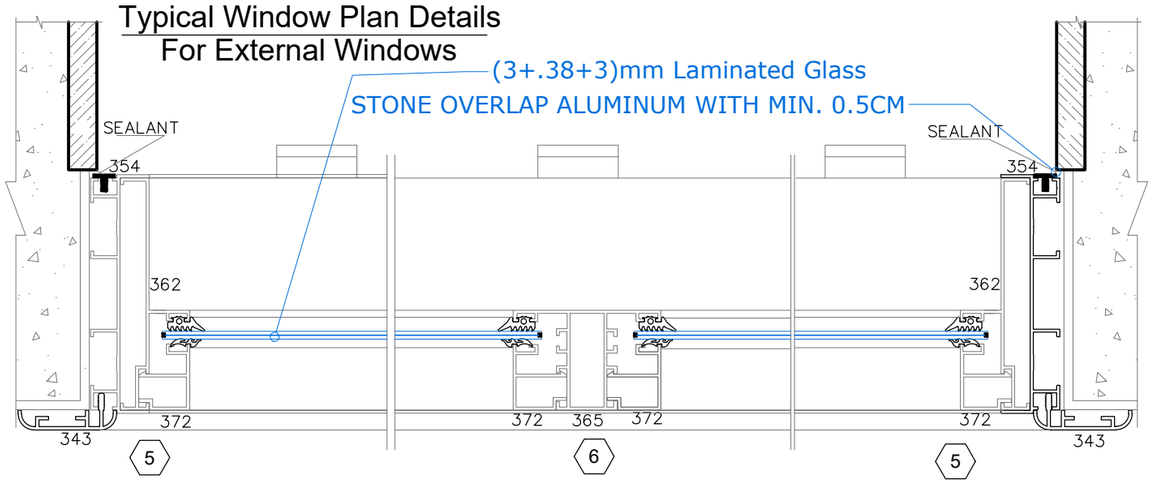

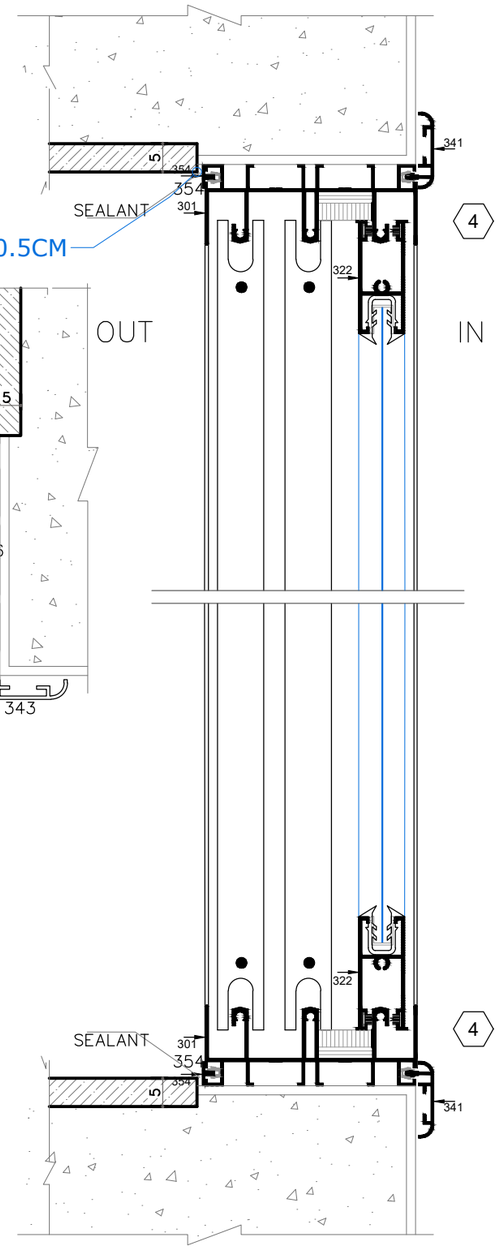

P24-2023

PROJECT TITLE:
Al-Sheikh Saad Girls School External Works

REFERENCE :# ###

GENERAL REMARKS:

LEGEND &SAMBOLS:

Section Number
Details No.& Sheet No.
Finish Floor Level
Ren .Concrete Level
Level In Plans
Windows Number
Door Number

Renfocement Concrete
Shear Walls
Plain Concrete
Concrete Block
Tiles
Stone
R.C.L Rens. Concrete Level
F.F.L Finish Floor Level
S.L Sea Level

REVISION HISTORY :

NO	DRAWINGS	DATE
REV01.	Preliminary Design	January24
REV02.		
REV03.		
REV04.		
REV05.		
REV06.		

CONTRACTING AUTHORITY :
Enabel -Belgian Development Agency

FUNDED BY:
Belgium partner in development

CONSULTANT:
ARAB ENGINEERS المهندسون العرب

Address :	Hebron -Halhul -Main Street -Natsha Building		
Telefax :	2251215 2 970+	Tel:	2226361 2 970+
Email :	info@arabengineers-Pal.com		
Website :	www.arabengineers-Pal.com		

SHEET NO.:	SHEET TITLE:
AD-202	External Windows Typical Details

DESIGNER:	Arch .Malek Z .Murad
CHECKED BY:	
DRAWN BY:	Arch .Yesmain Raia
SCALE:	NTS
DATE:	29th January2024 /

Painting Shall be Hummer Paint (Three Coats in Additional to Primer Coat)

Center Name & Center Logo Shall be Cut in 2.5mm Plate and Additional plate
In addition to the two plate of 2 mm will be Added behind CNC cut and Painted

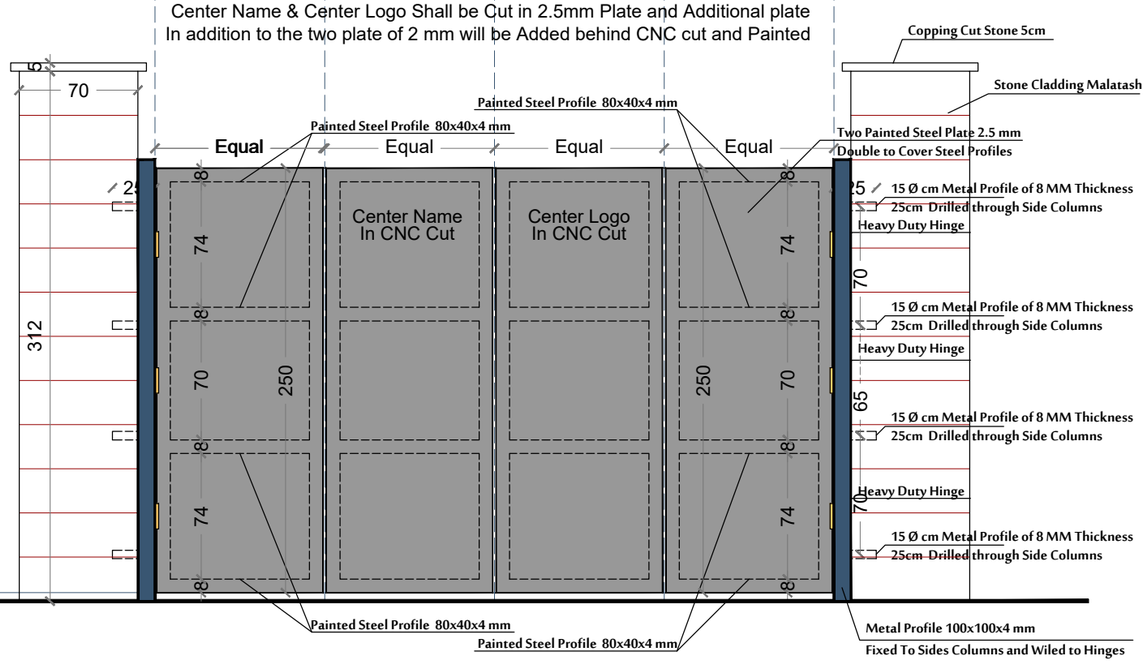

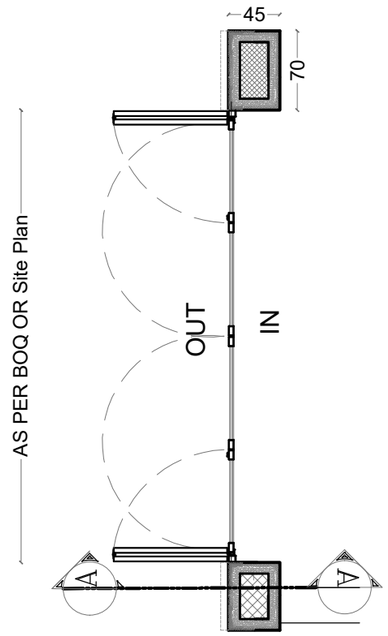

Plan

1/50

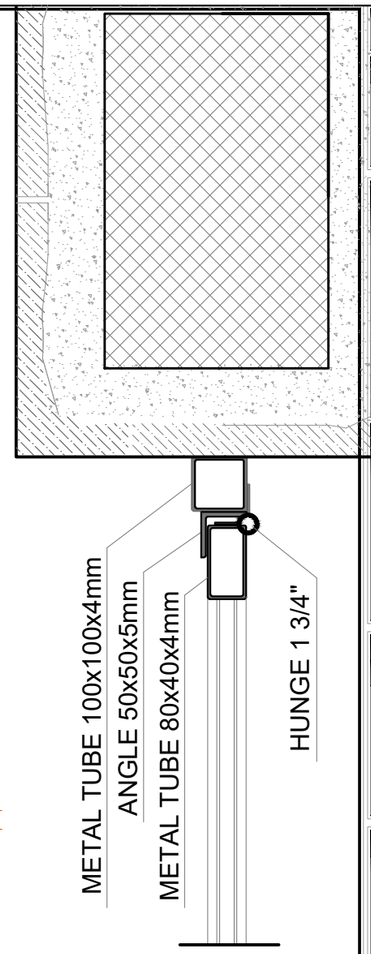

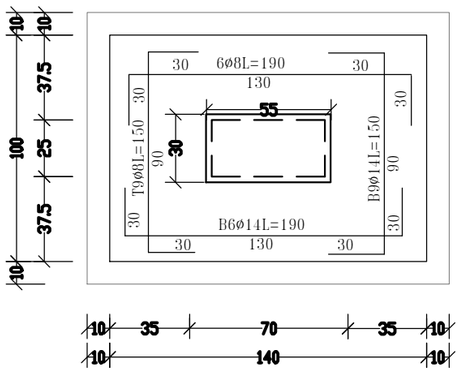

PLAN F1(140x100x40)
1:25

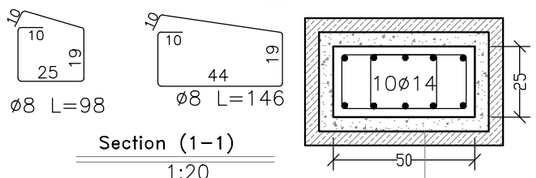

Section (1-1)
1:20

see cladding details

Section (4-4) In GB1
1:20

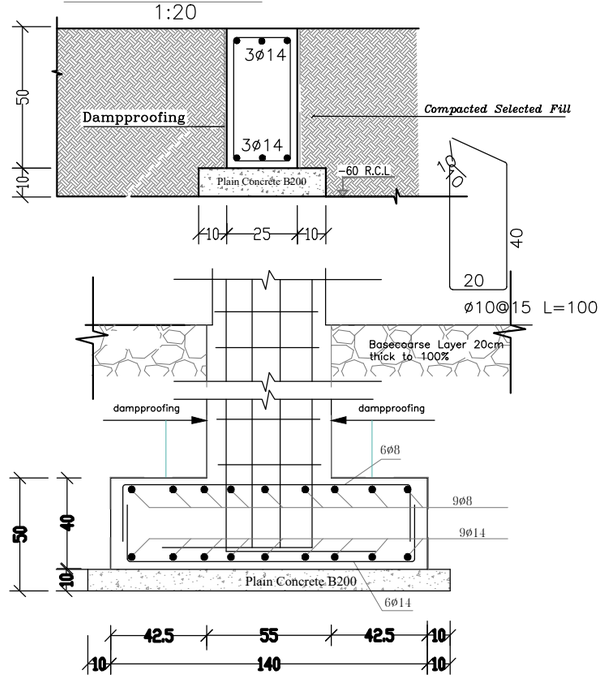

VERTICAL SECTION F1(140x100x40)
1:25

ALL METAL WORKS INCLUDING SCREW SHALL BE FROM GALVANIZED STEEL AND PAINTED WITH 3 COATS OIL PAINT IN THE COLOR PM REQUESTED

P24-2023

PROJECT TITLE:
Al-Sheikh Saad Girls School
External Works

REFERENCE :# ###

GENERAL REMARKS:

LEGEND &SAMBOLS:

Section Number
Details No & Sheet No.
Finish Floor Level
Ren .Concrete Level
Level In Plans
Windows Number
Door Number

Reinfocement Concrete
Shear Walls
Plain Concrete
Concrete Block
Tiles
Stone
R.C.L Reni. Concrete Level
F.F.L Finish Floor Level
S.L Sea Level

REVISION HISTORY :

NO	DRAWINGS	DATE
REV01.	Preliminary Design	January24
REV02.		
REV03.		
REV04.		
REV05.		
REV06.		

CONTRACTING AUTHORITY :
Enabel
Enabel -Belgian Development Agency

FUNDED BY:
Belgium
partner in development

CONSULTANT:
ARAB ENGINEERS
المهندسون العرب

Address : Hebron -Halhul -Main Street -Natsha Building
Telefax : 2251215 2 970+ Tel: 2226361 2 970+
Email : info@arabengineers-Pal.com
Website : www.arabengineers-Pal.com

SHEET NO.:	SHEET TITLE:
AD-203	School Upper Gate Typical Details

DESIGNER:	Arch .Malek Z .Murad
CHECKED BY:	
DRAWN BY:	Arch .Yesmain Raia
SCALE:	NTS
DATE:	29th January2024 /

ALL METAL WORKS INCLUDING SCREW SHALL BE FROM GALVANIZED STEEL AND PAINTED WITH 3 COATS OIL PAINT IN THE COLOR PM REQUESTED

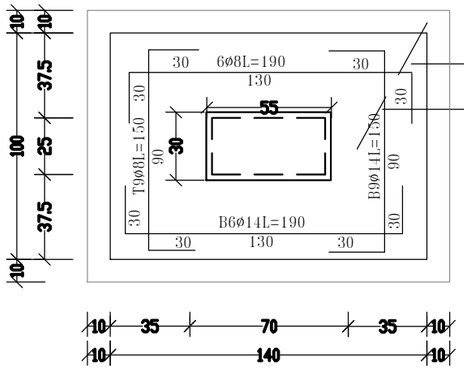

PLAN F1(140x100x40)
1:25

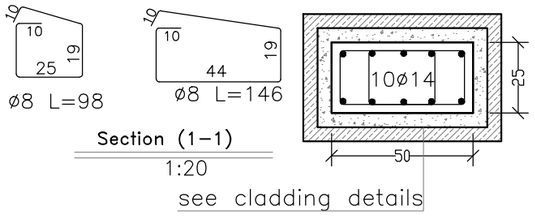

Section (1–1)
1:20

see cladding details

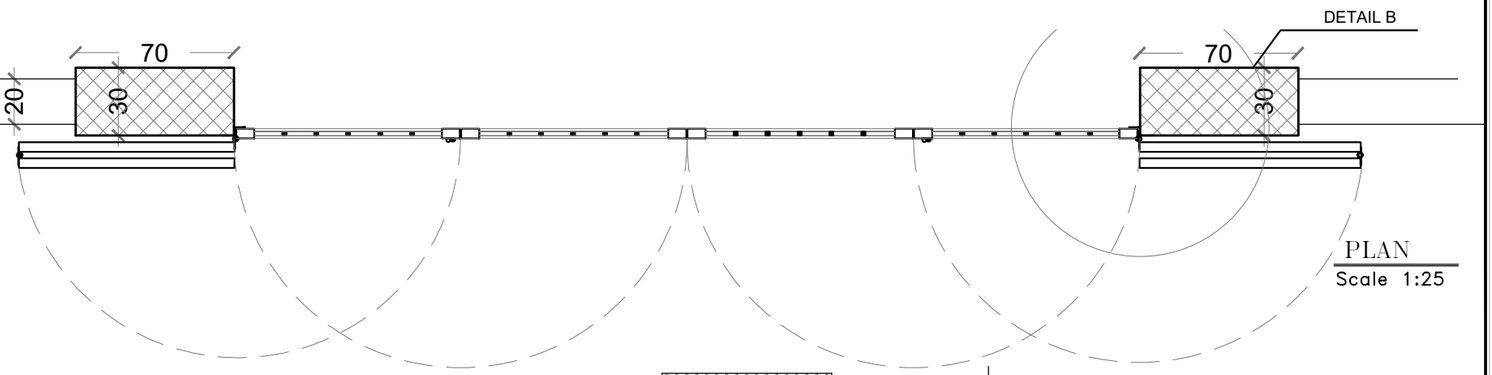

PLAN
Scale 1:25

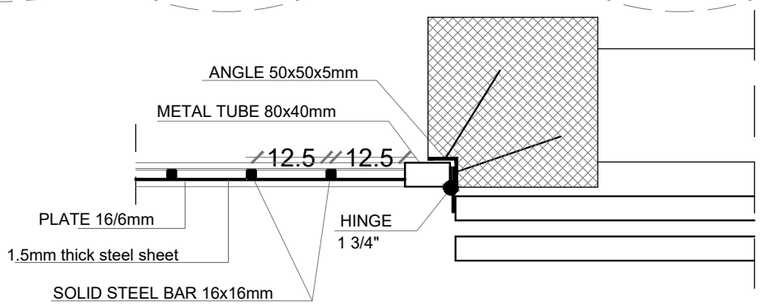

FENCE DETAIL B
Scale 1:10

Section (4–4) In GB1
1:20

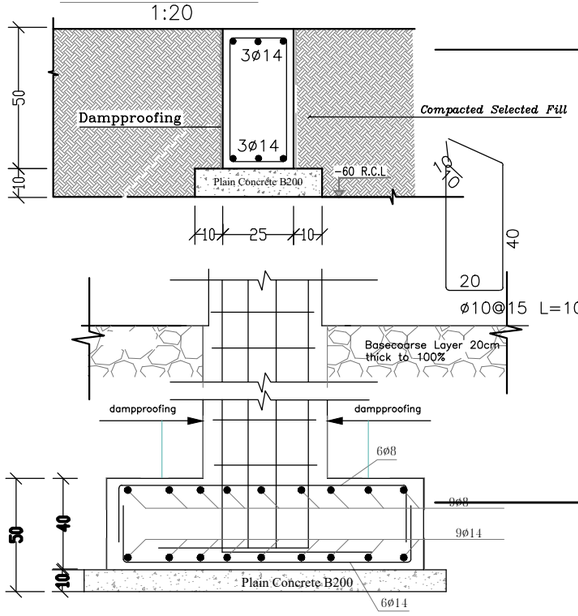

VERTICAL SECTION F1(140x100x40)
1:25

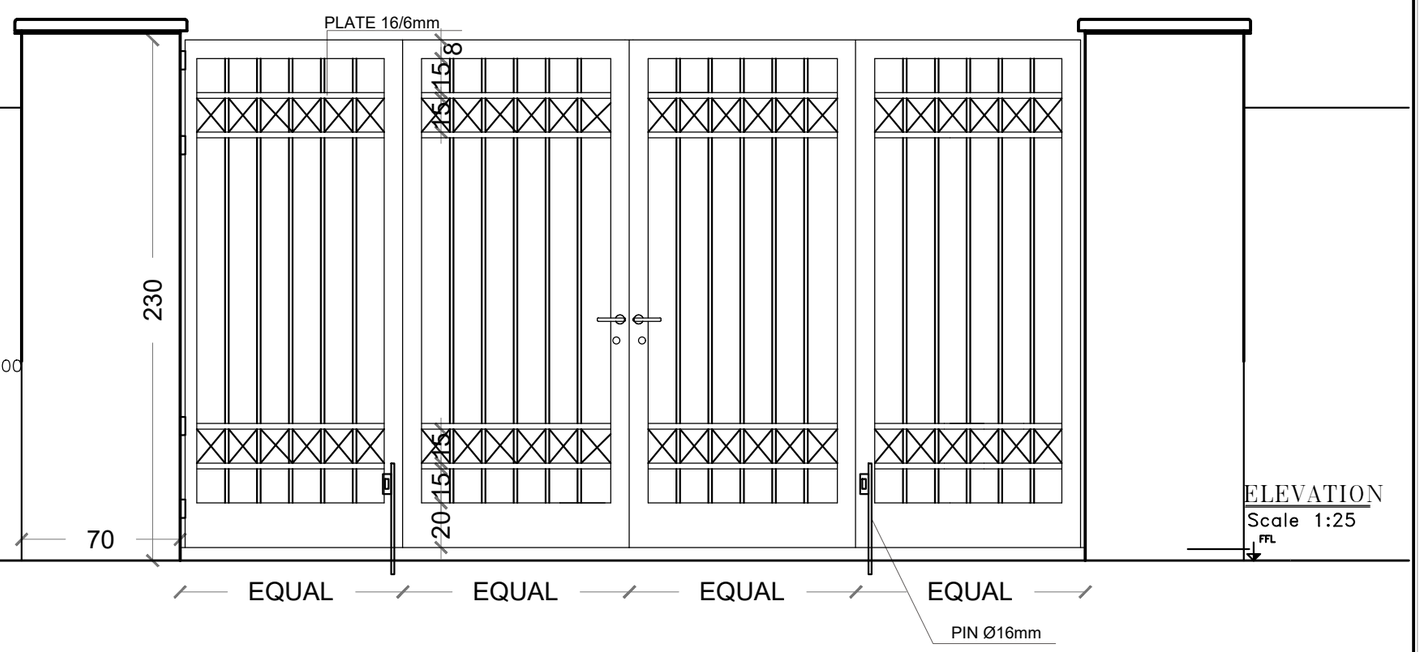

ELEVATION
Scale 1:25

P24-2023

PROJECT TITLE:
Al-Sheikh Saad Girls School External Works

REFERENCE :# ###

GENERAL REMARKS:

LEGEND &SAMBOLS:

Section Number
Details No.& Sheet No.
Finish Floor Level
Ren .Concrete Level
Level In Plans
Windows Number
Door Number

Reinforcement Concrete
Shear Walls
Plain Concrete
Concrete Block
Tiles
Stone
R.C.L Reni. Concrete Level
F.F.L Finish Floor Level
S.L Sea Level

REVISION HISTORY :

NO	DRAWINGS	DATE
REV01.	Preliminary Design	January24
REV02.		
REV03.		
REV04.		
REV05.		
REV06.		

CONTRACTING AUTHORITY :
Enabel -Belgian Development Agency

FUNDED BY:
Belgium partner in development

CONSULTANT:
ARAB ENGINEERS المهندسون العرب

Address : Hebron -Halhul -Main Street -Natsha Building
Telefax : 2251215 2 970+ Tel: 2226361 2 970+
Email : info@arabengineers-Pal.com
Website : www.arabengineers-Pal.com

SHEET NO.:	SHEET TITLE:
AD-204	School Emergency Gate Typical Details

DESIGNER:	Arch .Malek Z .Murad
CHECKED BY:	
DRAWN BY:	Arch .Yesmain Raia
SCALE:	NTS
DATE:	29th January2024 /

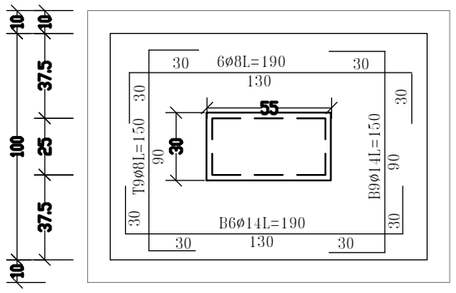

PLAN F1(140x100x40)
1:25

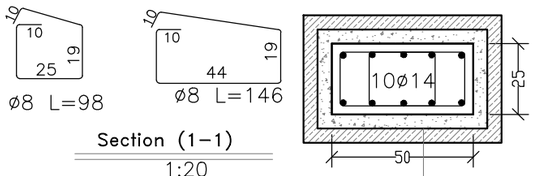

Section (1–1)
1:20
see cladding details

Section (4–4) In GB1
1:20

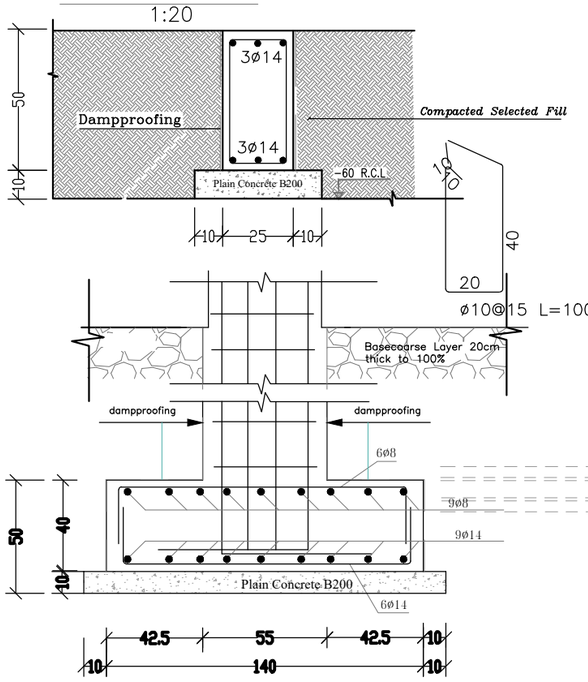

VERTICAL SECTION F1(140x100x40)
1:25

NOTE: ALL STEEL WORK MUST BE GAVANIZED

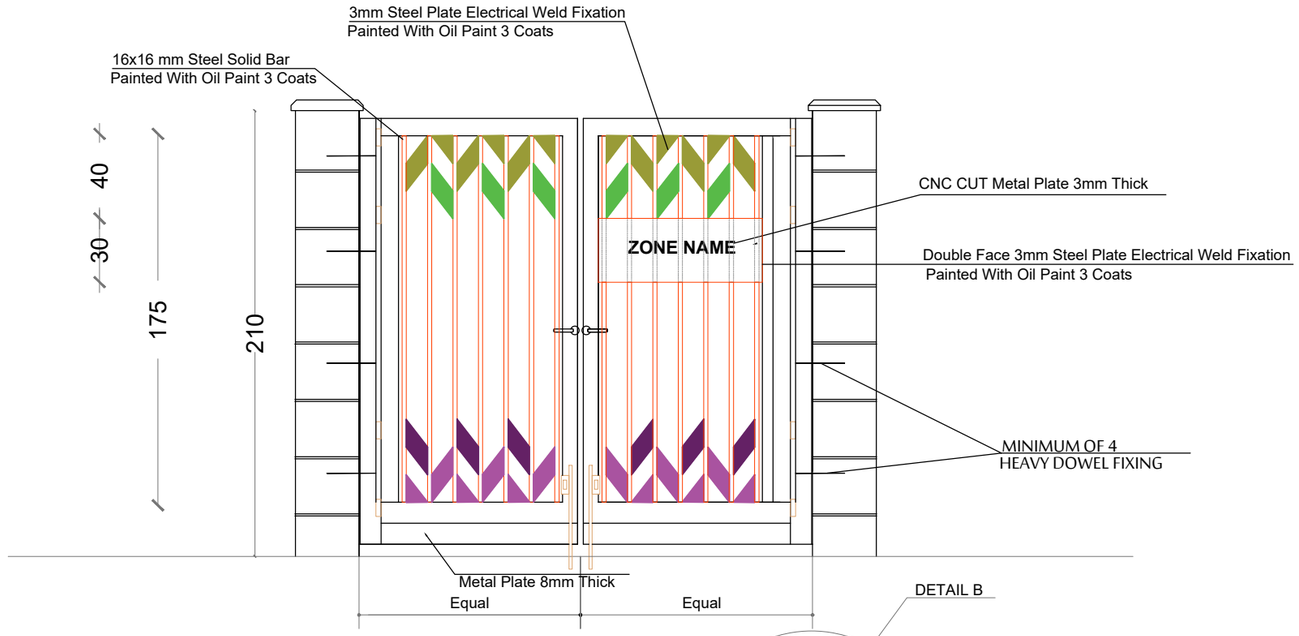

Typical Side Gate Details
Scale NTS

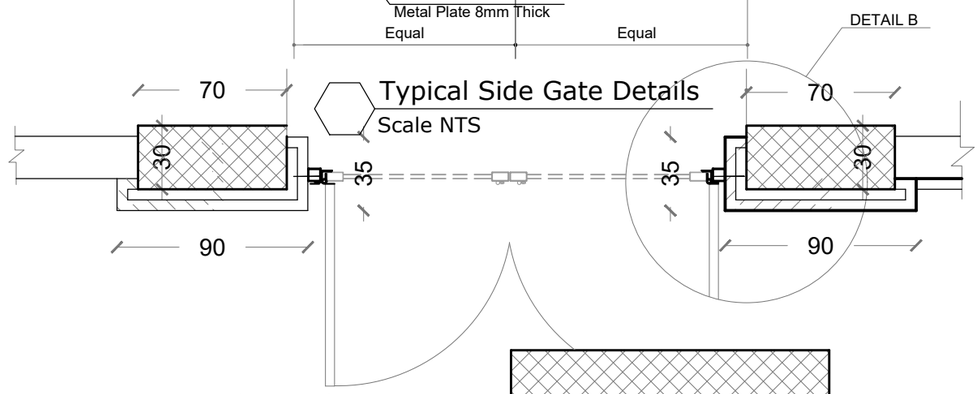

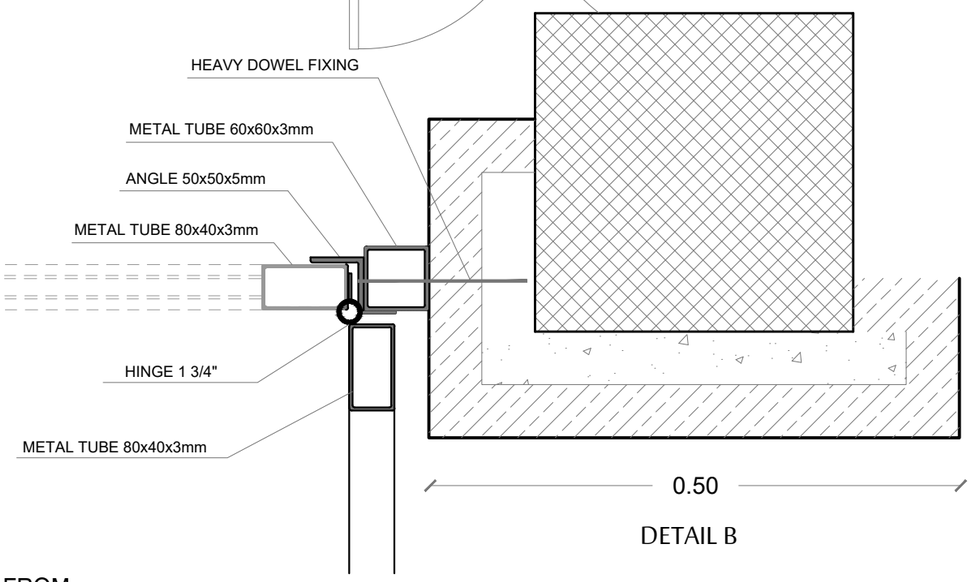

DETAIL B

ALL METAL WORKS INCLUDING SCREW SHALL BE FROM GALVANIZED STEEL AND PAINTED WITH 3 COATS OIL PAINT IN THE COLOR PM REQUESTED

THE CONTRACTOR SHOULD PROVIDE SHOP DRAWING FOR STEEL PROTECTION TO BE APPROVED BEFORE FIXING

P24-2023

PROJECT TITLE:
Al-Sheikh Saad Girls School External Works

REFERENCE :# ###

GENERAL REMARKS:

LEGEND &SAMBOLS:

Section Number
Details No & Sheet No.
Finish Floor Level
Ren .Concrete Level
Level In Plans
Windows Number
Door Number

Reinfocement Concrete
Shear Walls
Plain Concrete
Concrete Block
Tiles
Stone
R.C.L Reni. Concrete Level
F.F.L Finish Floor Level
S.L Sea Level

REVISION HISTORY :

NO	DRAWINGS	DATE
REV01.	Preliminary Design	January24
REV02.		
REV03.		
REV04.		
REV05.		
REV06.		

CONTRACTING AUTHORITY :
Enabel
Enabel -Belgian Development Agency

FUNDED BY:
Belgium
partner in development

CONSULTANT:
ARAB ENGINEERS
المهندسون العرب

Address : Hebron -Halhul -Main Street -Natsha Building
Telefax : 2251215 2 970+ Tel: 2226361 2 970+
Email : info@arabengineers-Pal.com
Website : www.arabengineers-Pal.com

SHEET NO.:	SHEET TITLE:
AD-205	Site Gate at Kindergarten &Parking Typical Details

DESIGNER:	Arch .Malek Z .Murad
CHECKED BY:	
DRAWN BY:	Arch .Yesmain Raia
SCALE:	NTS
DATE:	29th January2024 /

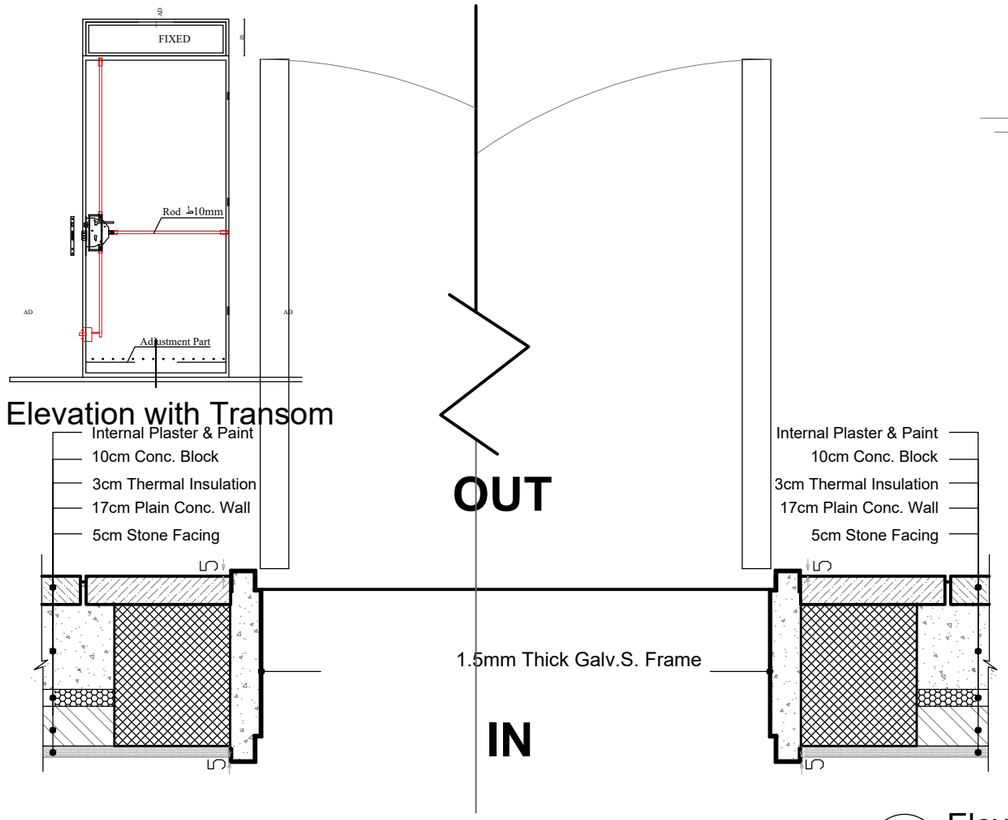

1 Plan
1 : 10

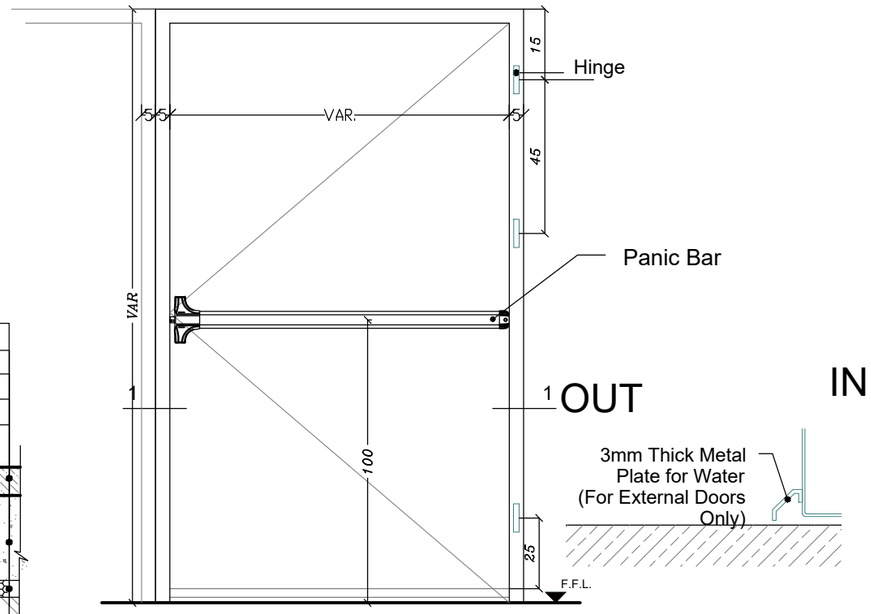

2 Elevation
1 : 20

3 Water Plate Detail
1 : 5

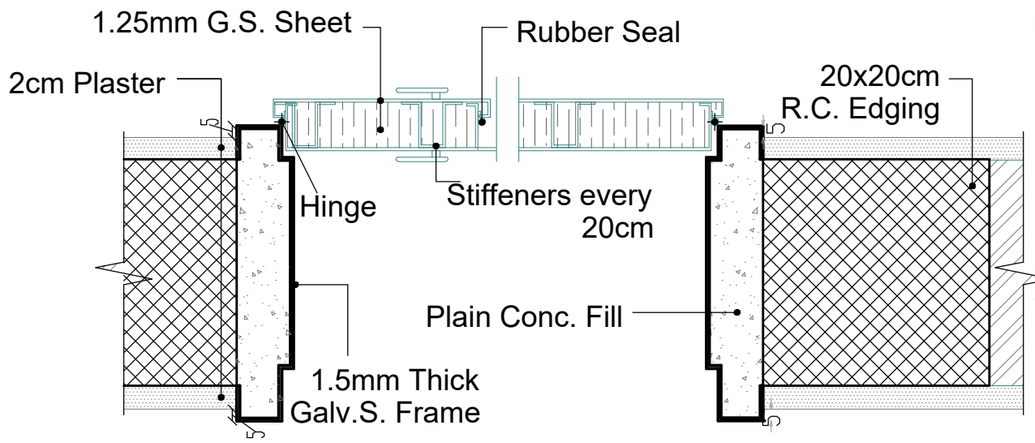

4 (1-1)Typical Steel Door Horizontal Sec.
1 : 10

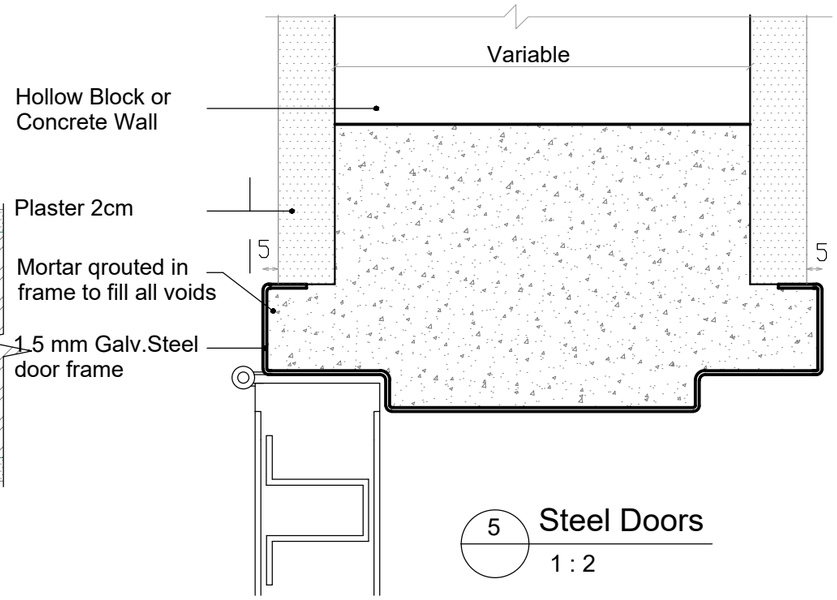

5 Steel Doors
1 : 2

P24-2023

PROJECT TITLE:
Al-Sheikh Saad Girls School External Works

REFERENCE :# ###

GENERAL REMARKS:

LEGEND &SAMBOLS:

Section Number
Details No & Sheet No.
Finish Floor Level
Ren .Concrete Level
Level In Plans
Windows Number
Door Number

Renfocement Concrete
Shear Walls
Plain Concrete
Concrete Block
Tiles
Stone
R.C.L Reni. Concrete Level
F.F.L Finish Floor Level
S.L Sea Level

REVISION HISTORY :

NO	DRAWINGS	DATE
REV01.	Preliminary Design	January24
REV02.		
REV03.		
REV04.		
REV05.		
REV06.		

CONTRACTING AUTHORITY :
Enabel -Belgian Development Agency

FUNDED BY:
Belgium partner in development

CONSULTANT:
ARAB ENGINEERS المهندسون العرب

Address :	Hebron -Halhul -Main Street -Natsha Building		
Telefax :	2251215 2 970+	Tel:	2226361 2 970+
Email :	info@arabengineers-Pal.com		
Website :	www.arabengineers-Pal.com		

SHEET NO.:	SHEET TITLE:
AD-206	Fire-Rated Door Typical Details

DESIGNER:	Arch .Malek Z .Murad
CHECKED BY:	
DRAWN BY:	Arch .Yesmain Raia
SCALE:	NTS
DATE:	29th January2024 /

Price Includes Using Several Colors

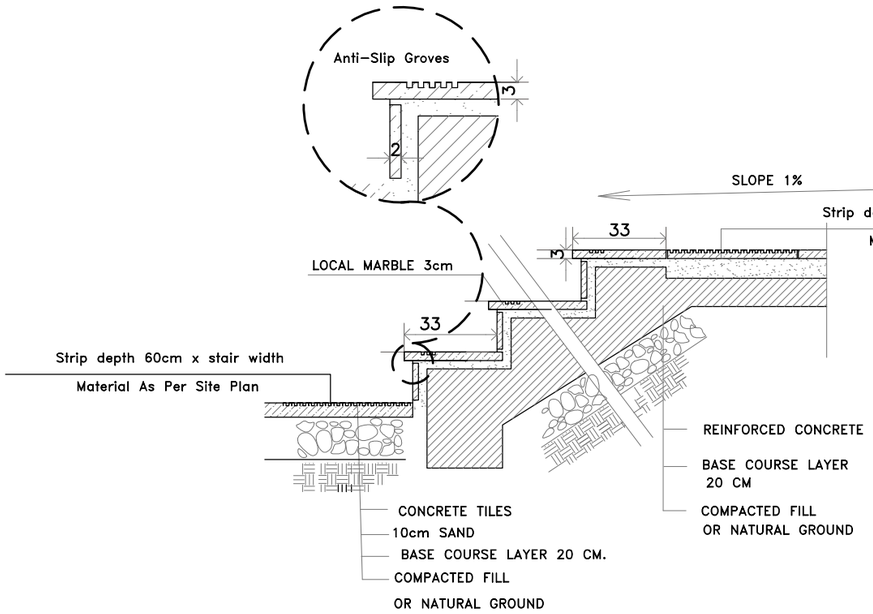

DETAIL OF EXTERNAL STAIRS

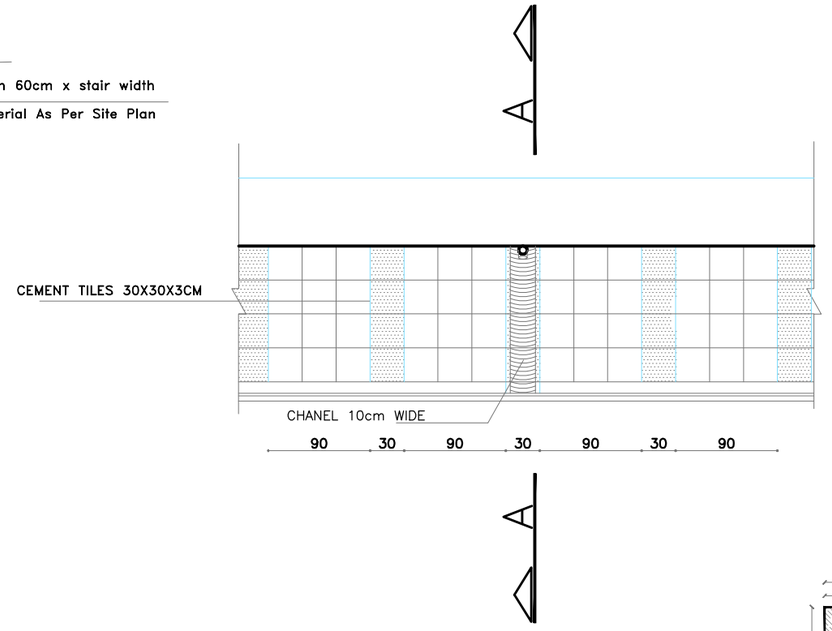

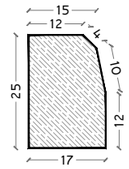

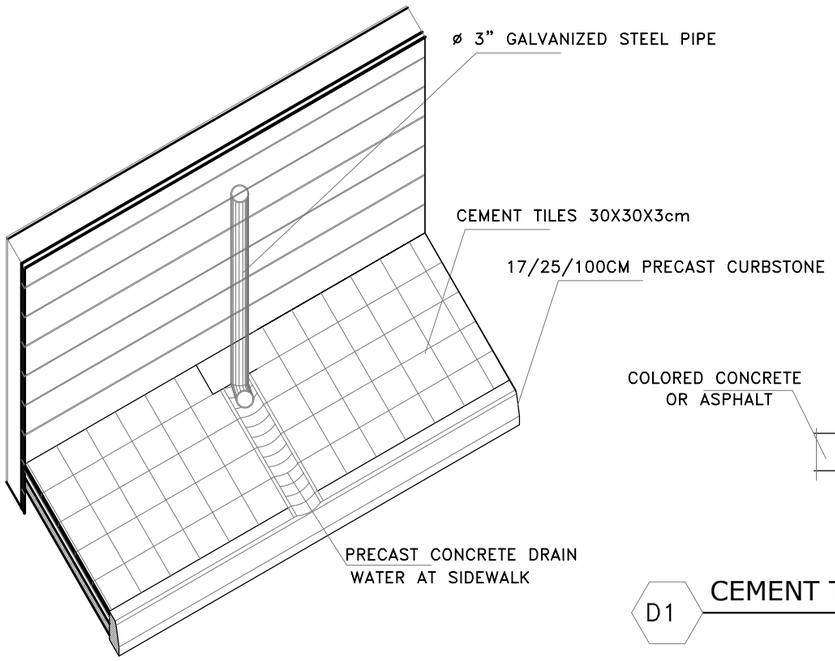

D1 CEMENT TILES DETAILS

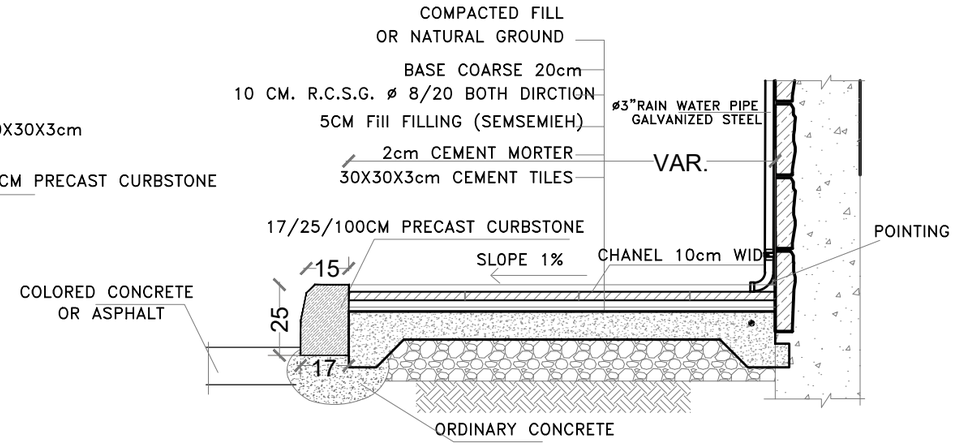

SECTION A-A

P24-2023

PROJECT TITLE:

Al-Sheikh Saad Girls School External Works

REFERENCE :# ###

GENERAL REMARKS:

LEGEND &SAMBOLS:

Section Number
Details No.& Sheet No.
Finish Floor Level
Ren .Concrete Level
Level In Plans
Windows Number
Door Number

Reinfocement Concrete
Shear Walls
Plain Concrete
Concrete Block
Tiles
Stone
R.C.L Reni. Concrete Level
F.F.L Finish Floor Level
S.L Sea Level

REVISION HISTORY :

NO	DRAWINGS	DATE
REV01.	Preliminary Design	January24
REV02.		
REV03.		
REV04.		
REV05.		
REV06.		

CONTRACTING AUTHORITY :

Enabel -Belgian Development Agency

FUNDED BY:

Belgium partner in development

CONSULTANT:

ARAB ENGINEERS المهندسون العرب

Address :	Hebron -Halhul -Main Street -Natsha Building		
Telefax :	2251215 2 970+	Tel:	2226361 2 970+
Email :	info@arabengineers-Pal.com		
Website :	www.arabengineers-Pal.com		

SHEET NO.:	SHEET TITLE:
AD-301	External Stairs and Cement Tiles Typical Details

DESIGNER:	Arch .Malek Z .Murad
CHECKED BY:	
DRAWN BY:	Arch .Yesmain Raia
SCALE:	NTS
DATE:	29th January2024 /

Price Includes Using Several Colors

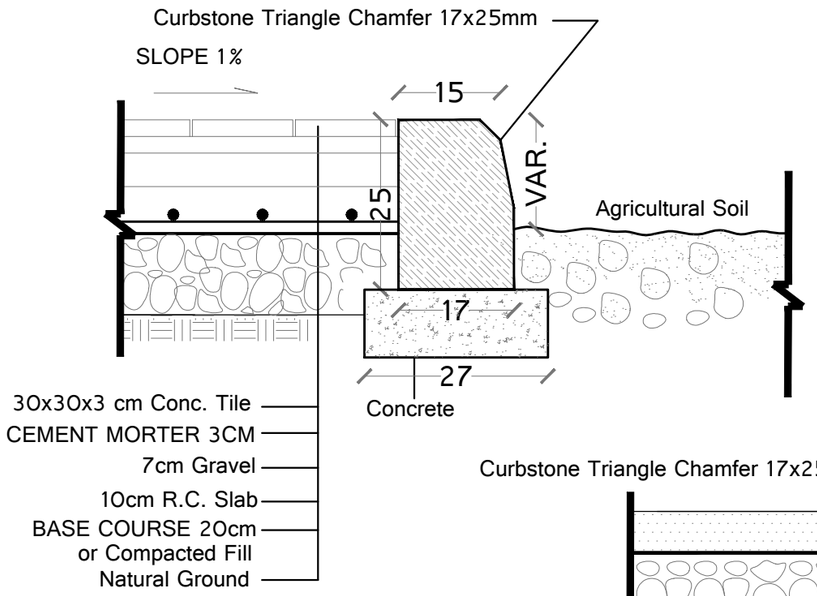

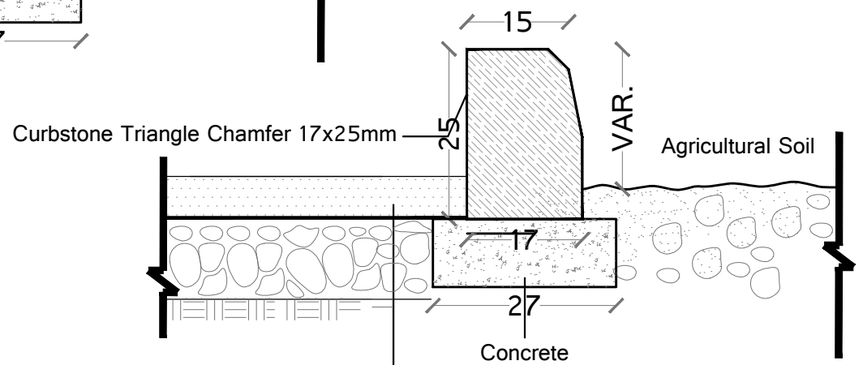

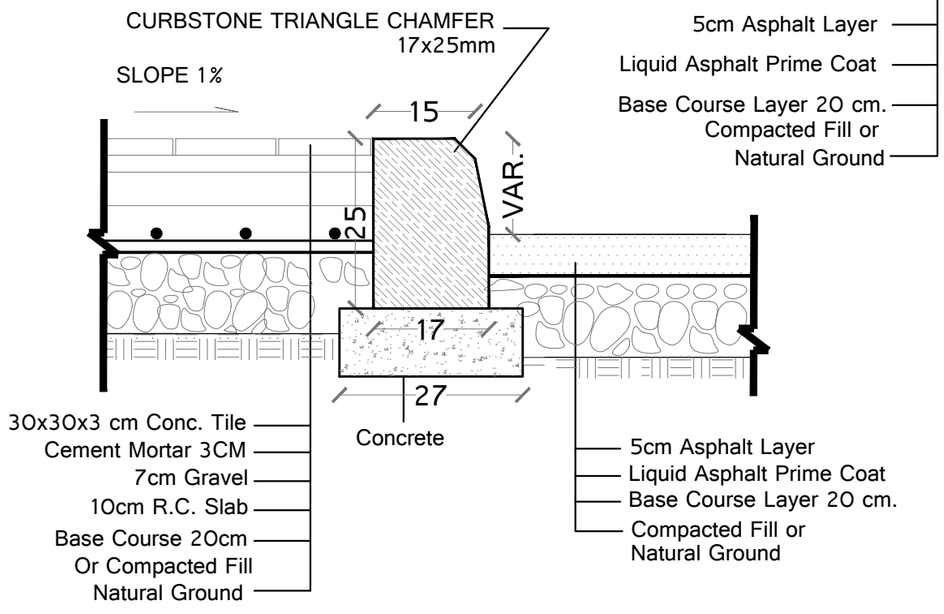

P24-2023

PROJECT TITLE:

Al-Sheikh Saad Girls School External Works

REFERENCE :#	###

GENERAL REMARKS:

LEGEND &SAMBOLS:

Section Number	Reinfocement Concrete
Details No.& .Sheet No.	Shear Walls
Finish Floor Level	Plain Concrete
Ren .Concrete Level	Concrete Block
Level In Plans	Tiles
Windows Number	Stone
Door Number	R.C.L Reni. Concrete Level
	F.F.L Finish Floor Level
	S.L Sea Level

REVISION HISTORY :

NO	DRAWINGS	DATE
REV01.	Preliminary Design	January24
REV02.		
REV03.		
REV04.		
REV05.		
REV06.		

CONTRACTING AUTHORITY :

Enabel -Belgian Development Agency

FUNDED BY:

Belgium partner in development

CONSULTANT:

ARAB ENGINEERS المهندسون العرب

Address :	Hebron -Halhul -Main Street -Natsha Building		
Telefax :	2251215 2 970+	Tel:	2226361 2 970+
Email :	info@arabengineers-Pal.com		
Website :	www.arabengineers-Pal.com		

SHEET NO.:	SHEET TITLE:
AD-302	Curbstone Typical Details

DESIGNER:	Arch .Malek Z .Murad
CHECKED BY:	
DRAWN BY:	Arch .Yesmain Raia

SCALE:	NTS
DATE:	29th January2024 /

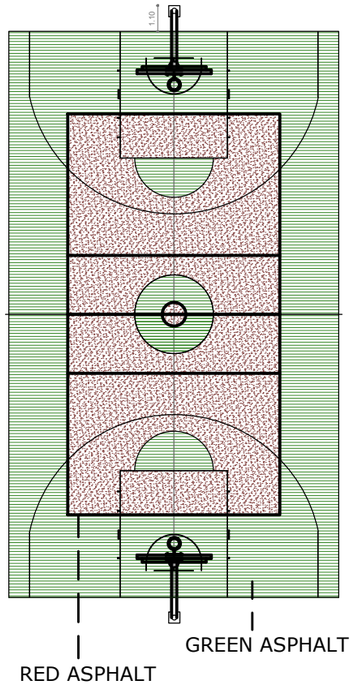

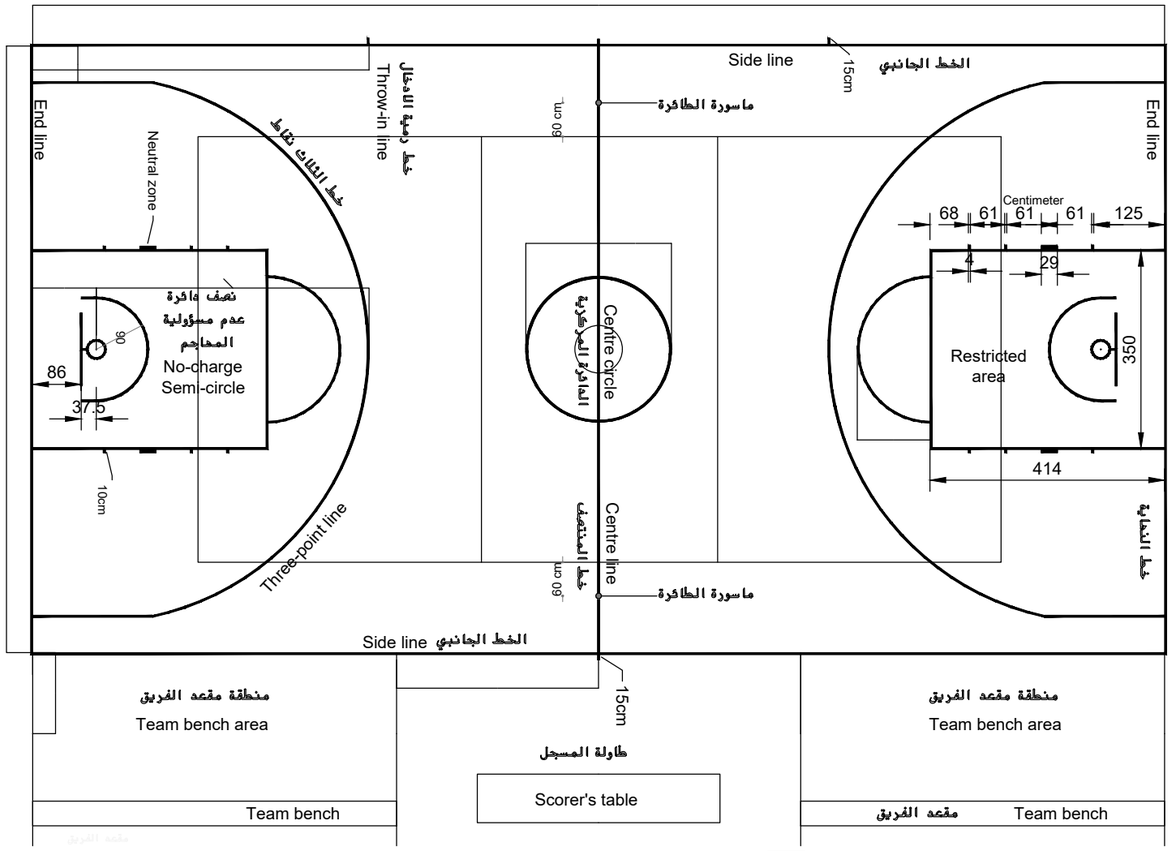

D01 PLAN BASKETBALL GROUND

SCALE 1:10

	اسم الخط	الأبعاد	موضع القياس	
			من الداخل	من الخارج
1	حدود ساحة اللعب	10.70* 20 m	●	
2	الدائرة المركزية ودوائر الرمية الحرة	R 127 cm		●
3	خط الرمية الحرة والمناطق المحرمة	414 cm		●
4	قوس منطقة الاصابة الميدانية بثلاث نقاط	R482 cm		●
5	خط رمية الادخال	594.8 cm		●
6	نصف دائرة عدم مسؤولية المهاجم	R 90 cm	●	

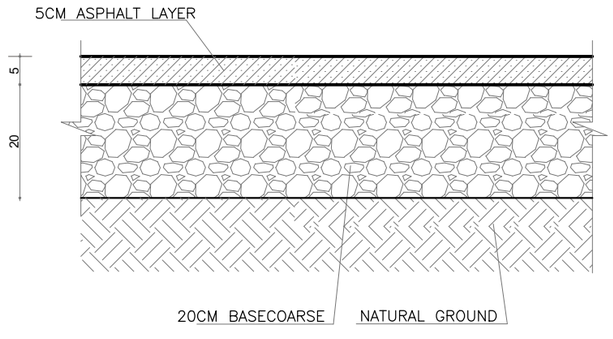

D02 SECTION IN THE BASKETBALL GROUND

SCALE 1:10

P24-2023

PROJECT TITLE:

Al-Sheikh Saad Girls School External Works

REFERENCE :# ###

GENERAL REMARKS:

LEGEND &SAMBOLS:

Section Number
Details No & Sheet No.
Finish Floor Level
Ren .Concrete Level
Level In Plans
Windows Number
Door Number

Reinfocement Concrete
Shear Walls
Plain Concrete
Concrete Block
Tiles
Stone
R.C.L Reni. Concrete Level
F.F.L Finish Floor Level
S.L Sea Level

REVISION HISTORY :

NO	DRAWINGS	DATE
REV01.	Preliminary Design	January24
REV02.		
REV03.		
REV04.		
REV05.		
REV06.		

CONTRACTING AUTHORITY :

Enabel -Belgian Development Agency

FUNDED BY:

Belgium partner in development

CONSULTANT:

ARAB ENGINEERS المهندسون العرب

Address : Hebron -Halhul -Main Street -Natsha Building
Telefax : 2251215 2 970+ Tel: 2226361 2 970+
Email : info@arabengineers-Pal.com
Website : www.arabengineers-Pal.com

SHEET NO.:	SHEET TITLE:
AD-303	Asphalt and Playground Typical Details

DESIGNER:	Arch .Malek Z .Murad
CHECKED BY:	
DRAWN BY:	Arch .Yesmain Raia
SCALE:	NTS
DATE:	29th January2024 /

Price Includes Using Several Colors

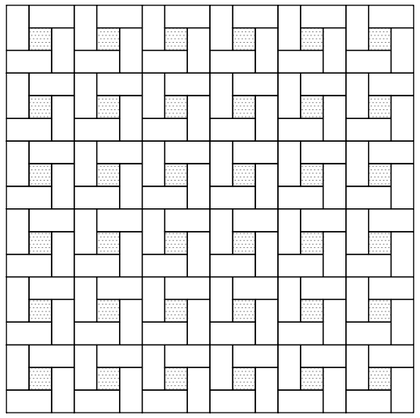

INTERLOCK TILING TEXTURE
FOR YARDS AREA

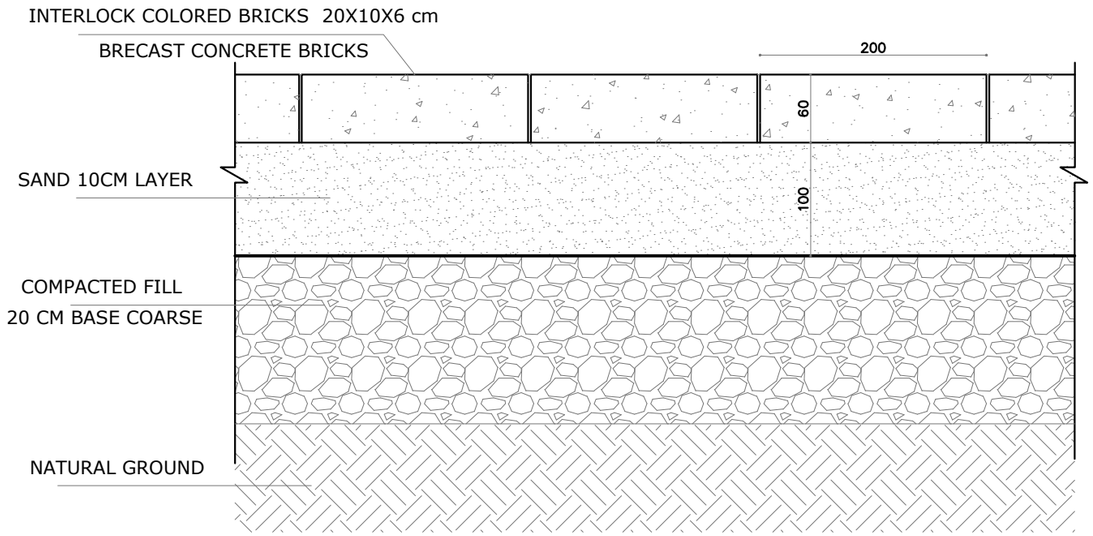

D01 INTERLOCK PAVEMENT DETAIL

P24-2023

PROJECT TITLE:

Al-Sheikh Saad Girls School
External Works

REFERENCE :#	###

GENERAL REMARKS:

LEGEND &SAMBOLS:

Section Number
Details No.& .Sheet No.
Finish Floor Level
Ren .Concrete Level
Level In Plans
Windows Number
Door Number

	Renfocement Concrete
	Shear Walls
	Plain Concrete
	Concrete Block
	Tiles
	Stone
R.C.L	Rens. Concrete Level
F.F.L	Finish Floor Level
S.L	Sea Level

REVISION HISTORY :

NO	DRAWINGS	DATE
REV01.	Preliminary Design	January24
REV02.		
REV03.		
REV04.		
REV05.		
REV06.		

CONTRACTING AUTHORITY :

Enabel

Enabel -Belgian Development Agency

FUNDED BY:

Belgium
partner in development

CONSULTANT:

ARAB ENGINEERS
المهندسون العرب

Address :	Hebron -Halhul -Main Street -Natsha Building		
Telefax :	2251215 2 970+	Tel:	2226361 2 970+
Email :	info@arabengineers-Pal.com		
Website :	www.arabengineers-Pal.com		

SHEET NO.:	SHEET TITLE:
AD-304	Interlock Tiles Typical Details

DESIGNER:	Arch .Malek Z .Murad
CHECKED BY:	
DRAWN BY:	Arch .Yesmain Raia

SCALE:	NTS
DATE:	29th January2024 /

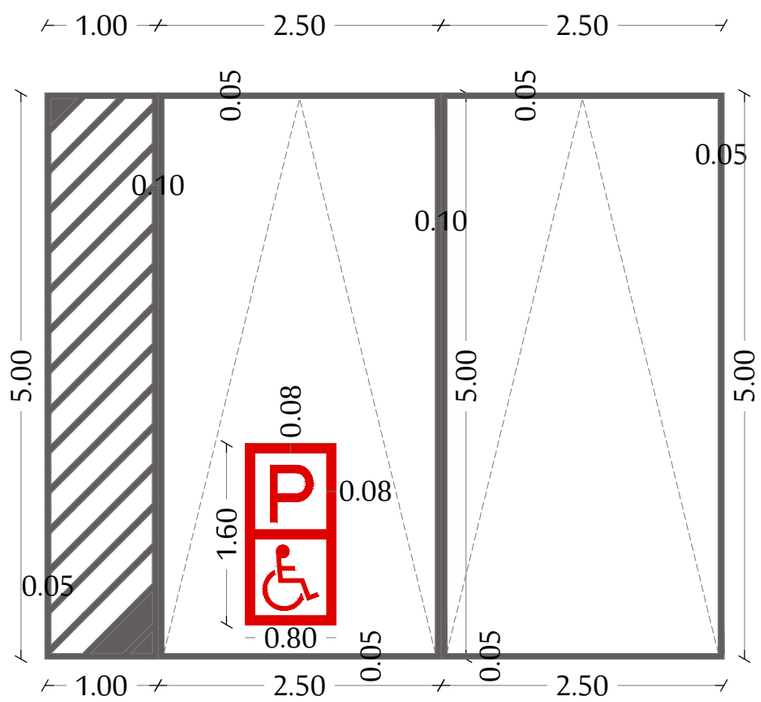

P24-2023

PROJECT TITLE:

Al-Sheikh Saad Girls School External Works

REFERENCE :#	###

GENERAL REMARKS:

LEGEND &SAMBOLS:

- Section Number
- Details No.& .Sheet No.
- Finish Floor Level
- Ren .Concrete Level
- Level In Plans
- Windows Number
- Door Number

- Renfocement Concrete
- Shear Walls
- Plain Concrete
- Concrete Block
- Tiles
- Stone
- R.C.L Rens. Concrete Level
- F.F.L Finish Floor Level
- S.L Sea Level

REVISION HISTORY :

NO	DRAWINGS	DATE
REV01.	Preliminary Design	January24
REV02.		
REV03.		
REV04.		
REV05.		
REV06.		

CONTRACTING AUTHORITY :

Enabel

Enabel -Belgian Development Agency

FUNDED BY:

Belgium partner in development

CONSULTANT:

ARAB ENGINEERS المهندسون العرب

Address :	Hebron -Halhul -Main Street -Natsha Building		
Telefax :	2251215 2 970+	Tel:	2226361 2 970+
Email :	info@arabengineers-Pal.com		
Website :	www.arabengineers-Pal.com		

SHEET NO.:	SHEET TITLE:
AD-305	Marking Typical Details

DESIGNER:	Arch .Malek Z .Murad
CHECKED BY:	
DRAWN BY:	Arch .Yesmain Raia

SCALE:	NTS
DATE:	29th January2024 /

THE CONTRACTOR SHALL SUPPLY AND FIX SIMILAR EQUIPMENT AND IT SHALL BE PRE MANUFACTURED, ALL METAL WORKS PROFILE AND THICKNESS SHALL BE AS SUGGESTED FROM MANUFACTURER AND ALL METAL WORKS INCLUDING SCREW SHALL BE FROM GALVANIZED STEEL AND PAINTED WITH 3 COATS OIL PAINT IN THE COLOR PM REQUESTED

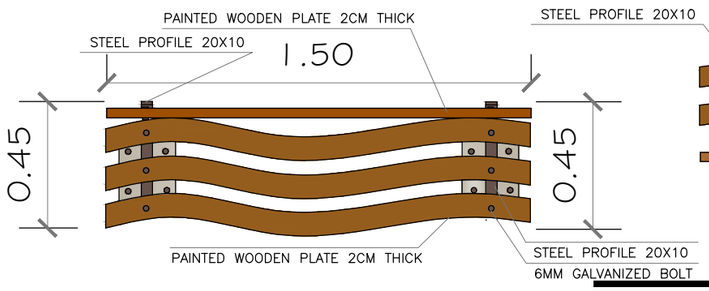

D1 EXTERNAL SEAT PLAN
NTS

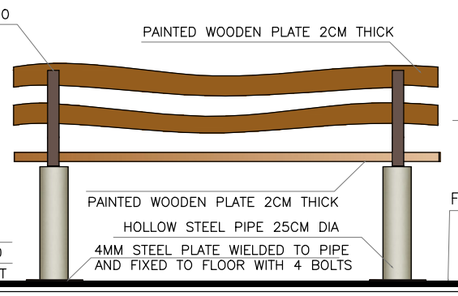

D2 EXTERNAL SEAT BACK ELEVATION
NTS

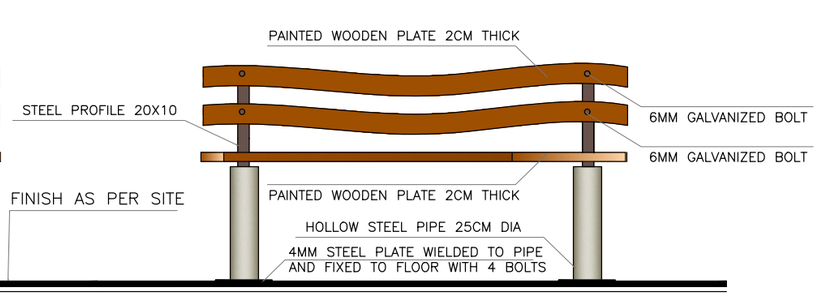

D3 EXTERNAL SEAT FRONT ELEVATION
NTS

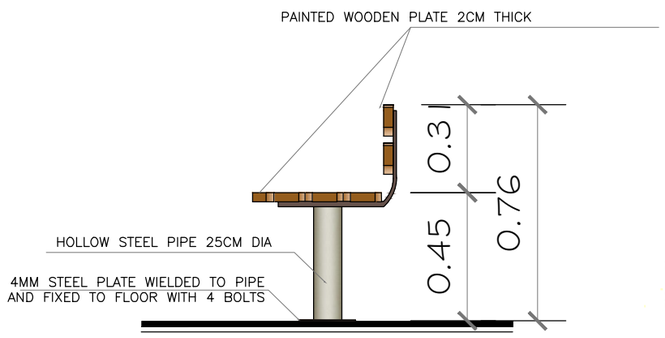

D4 EXTERNAL SEAT SIDE ELEVATION
NTS

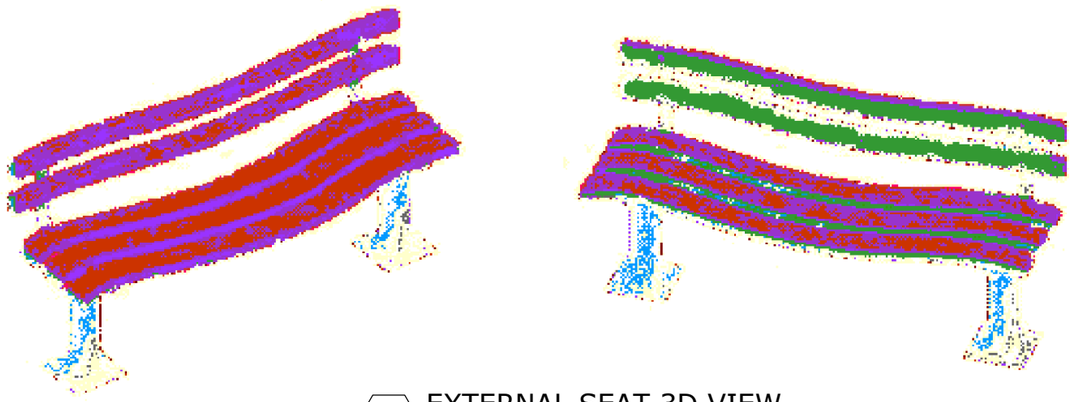

D5 EXTERNAL SEAT 3D VIEW
NTS

P24-2023

PROJECT TITLE:

Al-Sheikh Saad Girls School External Works

REFERENCE :#	###

GENERAL REMARKS:

LEGEND &SAMBOLS:

Section Number
Details No.& Sheet No.
Finish Floor Level
Ren .Concrete Level
Level In Plans
Windows Number
Door Number

Reinfocement Concrete
Shear Walls
Plain Concrete
Concrete Block
Tiles
Stone
R.C.L Reni. Concrete Level
F.F.L Finish Floor Level
S.L Sea Level

REVISION HISTORY :

NO	DRAWINGS	DATE
REV01.	Preliminary Design	January24
REV02.		
REV03.		
REV04.		
REV05.		
REV06.		

CONTRACTING AUTHORITY :

Enabel -Belgian Development Agency

FUNDED BY:

Belgium partner in development

CONSULTANT:

ARAB ENGINEERS المهندسون العرب

Address :	Hebron -Halhul -Main Street -Natsha Building		
Telefax :	2251215 2 970+	Tel:	2226361 2 970+
Email :	info@arabengineers-Pal.com		
Website :	www.arabengineers-Pal.com		

SHEET NO.:	SHEET TITLE:
AD-401	External Seats Typical Details

DESIGNER:	Arch .Malek Z .Murad
CHECKED BY:	
DRAWN BY:	Arch .Yesmain Raia

SCALE:	NTS
DATE:	29th January2024 /

THE CONTRACTOR SHALL SUPPLY AND FIX SIMILAR EQUIPMENT AND IT SHALL BE PRE MANUFACTURED, ALL METAL WORKS PROFILE AND THICKNESS SHALL BE AS SUGGESTED FROM MANUFACTURER AND ALL METAL WORKS INCLUDING SCREW SHALL BE FROM GALVANIZED STEEL AND PAINTED WITH 3 COATS OIL PAINT IN THE COLOR PM REQUESTED

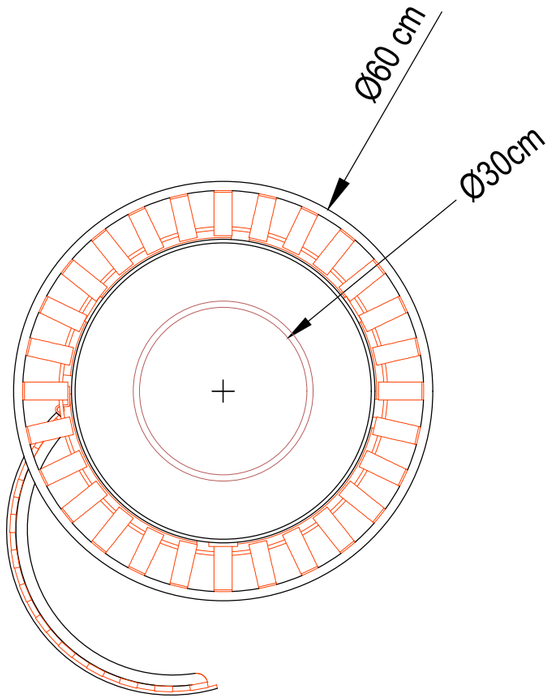

TOP VIEW

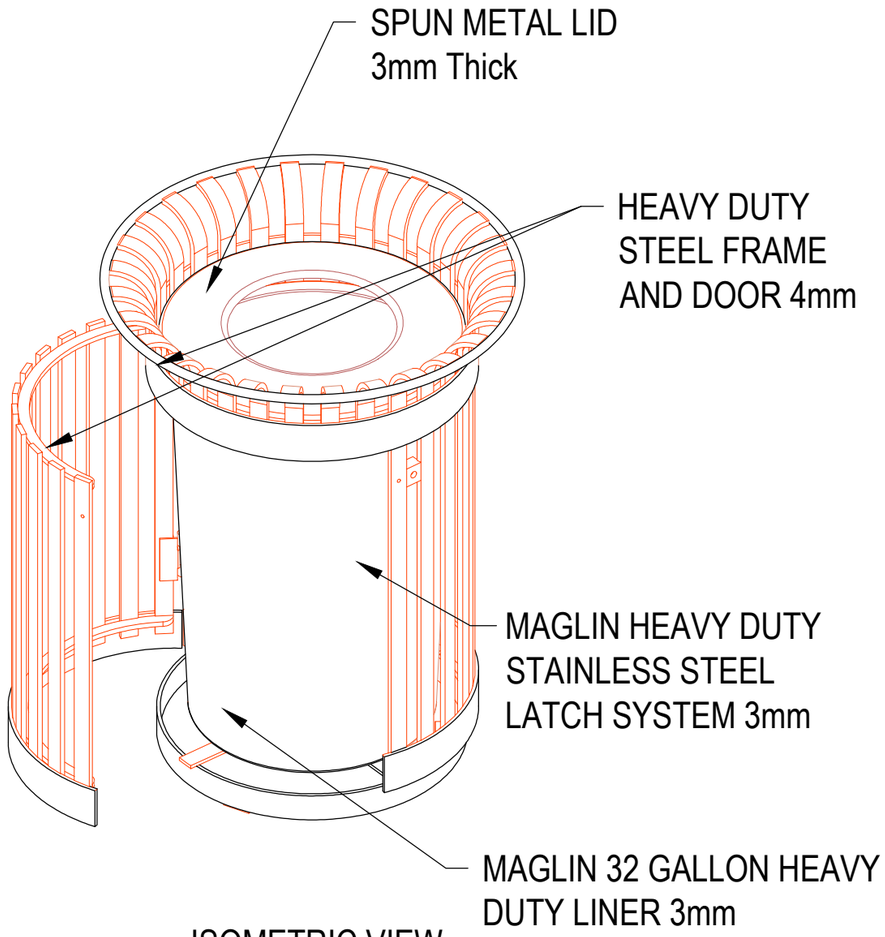

ISOMETRIC VIEW

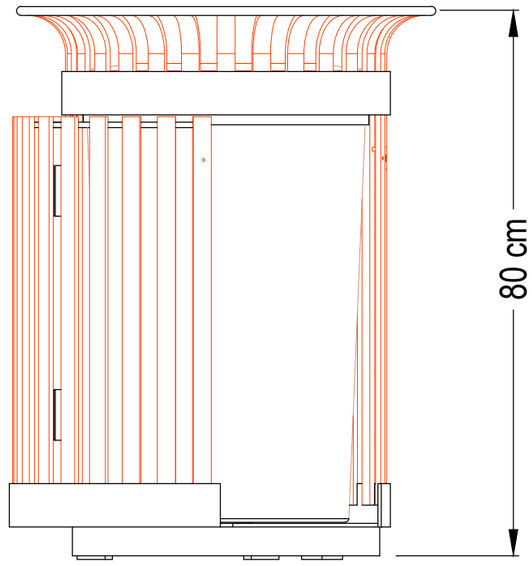

FRONT ELEVATION

P24-2023

PROJECT TITLE:

Al-Sheikh Saad Girls School External Works

REFERENCE :#	###

GENERAL REMARKS:

LEGEND &SAMBOLS:

Section Number	Renfocement Concrete
Details No.& .Sheet No.	Shear Walls
Finish Floor Level	Plain Concrete
Ren .Concrete Level	Concrete Block
Level In Plans	Tiles
Windows Number	Stone
Door Number	R.C.L Rens. Concrete Level
	F.F.L Finish Floor Level
	S.L Sea Level

REVISION HISTORY :

NO	DRAWINGS	DATE
REV01.	Preliminary Design	January24
REV02.		
REV03.		
REV04.		
REV05.		
REV06.		

CONTRACTING AUTHORITY :

Enabel

Enabel -Belgian Development Agency

FUNDED BY:

Belgium
partner in development

CONSULTANT:

ARAB ENGINEERS
المهندسون العرب

Address :	Hebron -Halhul -Main Street -Natsha Building		
Telefax :	2251215 2 970+	Tel:	2226361 2 970+
Email :	info@arabengineers-Pal.com		
Website :	www.arabengineers-Pal.com		

SHEET NO.:	SHEET TITLE:
AD-402	External Waste Bin Typical Details

DESIGNER:	Arch .Malek Z .Murad
CHECKED BY:	
DRAWN BY:	Arch .Yesmain Raia

SCALE:	NTS
DATE:	29th January2024 /

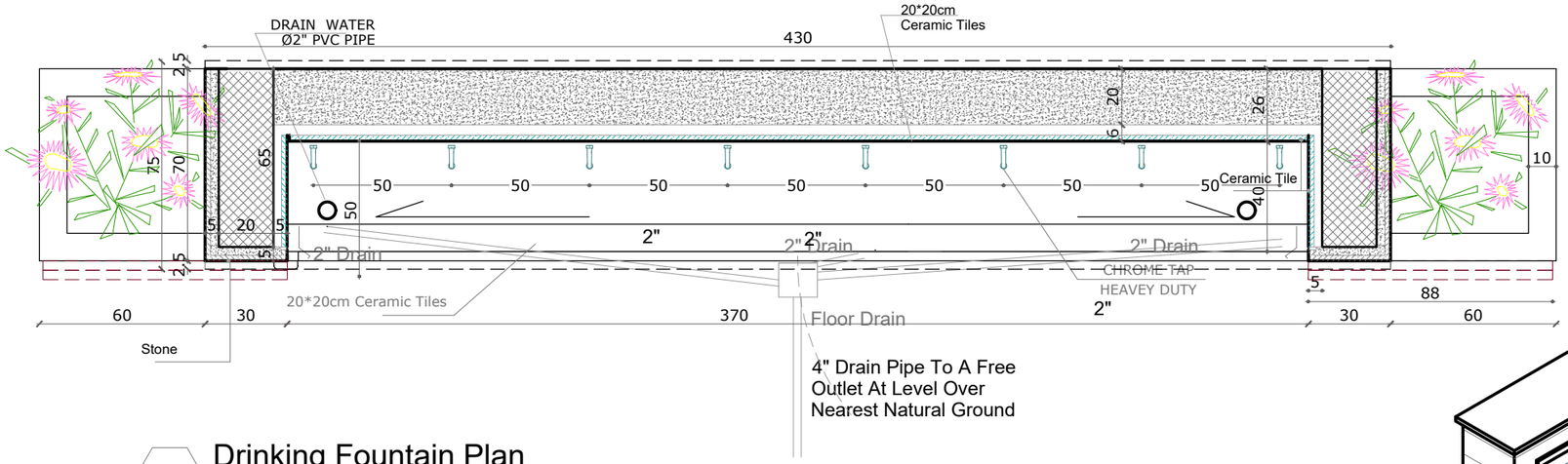

D01 Drinking Fountain Plan
1 : 20

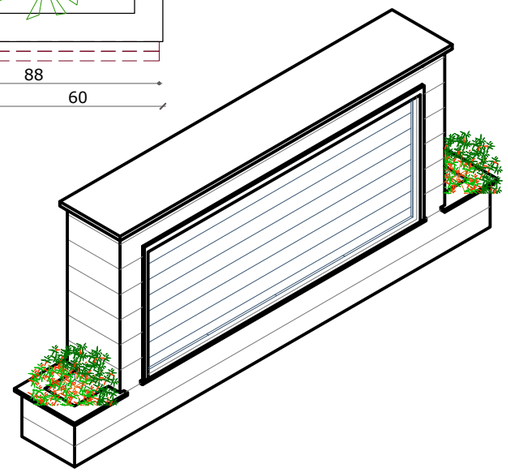

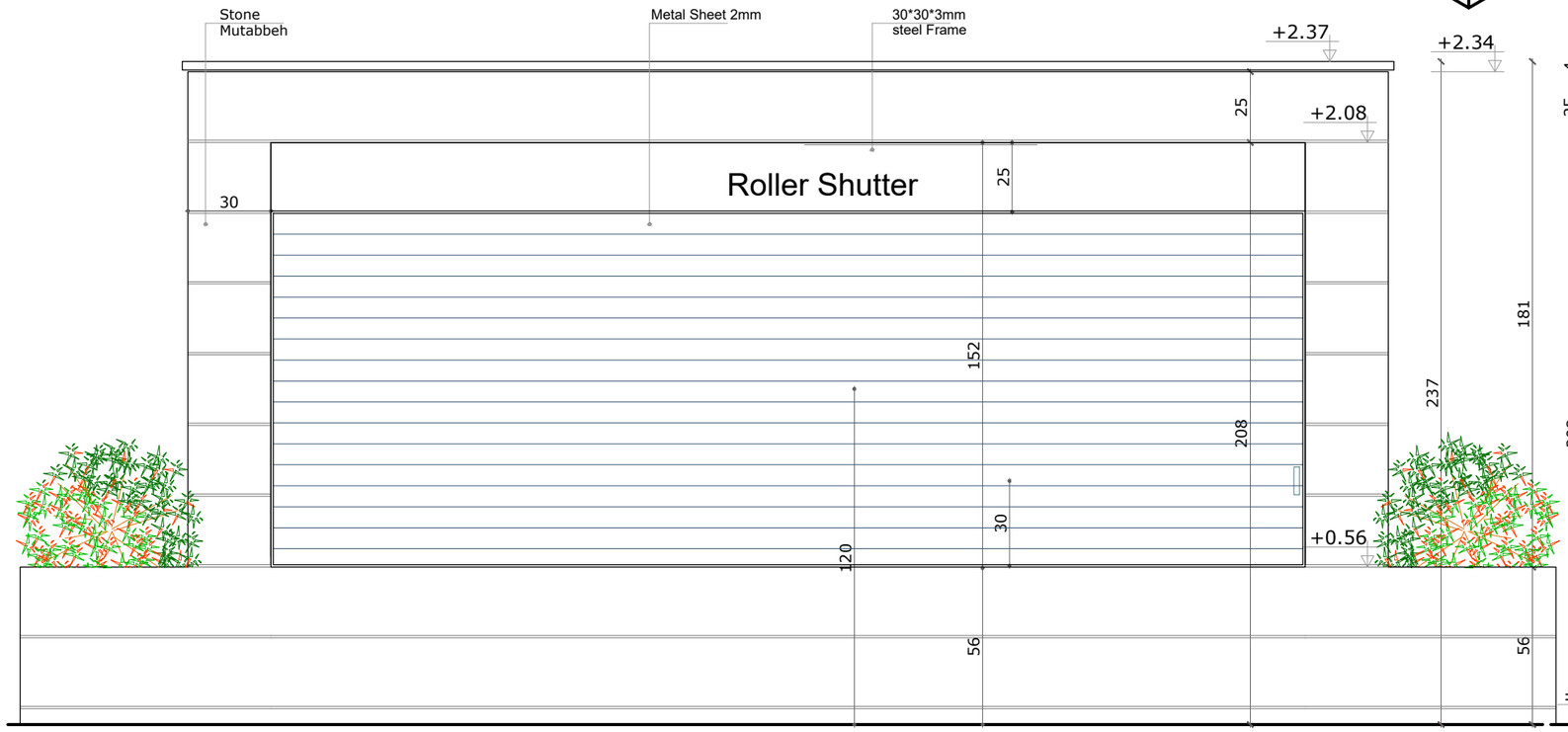

D02 Drinking Fountain Elev.
1 : 20

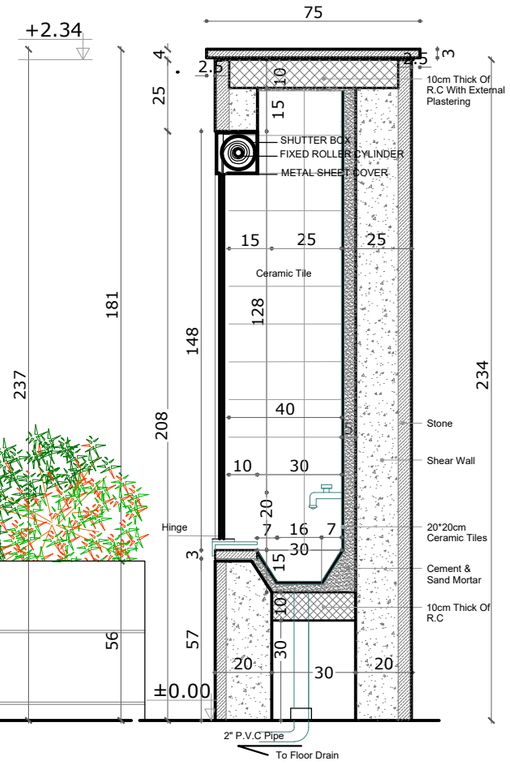

03 Drinking Fountain Sec.
1 : 10

P24-2023

PROJECT TITLE:

Al-Sheikh Saad Girls School
External Works

REFERENCE :#	###

GENERAL REMARKS:

LEGEND &SAMBOLS:

Section Number
Details No.& Sheet No.
Finish Floor Level
Ren .Concrete Level
Level In Plans
Windows Number
Door Number

Reinfocement Concrete
Shear Walls
Plain Concrete
Concrete Block
Tiles
Stone
R.C.L Reni. Concrete Level
F.F.L Finish Floor Level
S.L Sea Level

REVISION HISTORY :

NO	DRAWINGS	DATE
REV01.	Preliminary Design	January24
REV02.		
REV03.		
REV04.		
REV05.		
REV06.		

CONTRACTING AUTHORITY :

Enabel -Belgian Development Agency

FUNDED BY:

Belgium
partner in development

CONSULTANT:

ARAB ENGINEERS
المهندسون العرب

Address :	Hebron -Halhul -Main Street -Natsha Building		
Telefax :	2251215 2 970+	Tel:	2226361 2 970+
Email :	info@arabengineers-Pal.com		
Website :	www.arabengineers-Pal.com		

SHEET NO.:	SHEET TITLE:
AD-403	Drinking Fountain Typical Details

DESIGNER:	Arch .Malek Z .Murad
CHECKED BY:	
DRAWN BY:	Arch .Yesmain Raia
SCALE:	NTS
DATE:	29th January2024 /

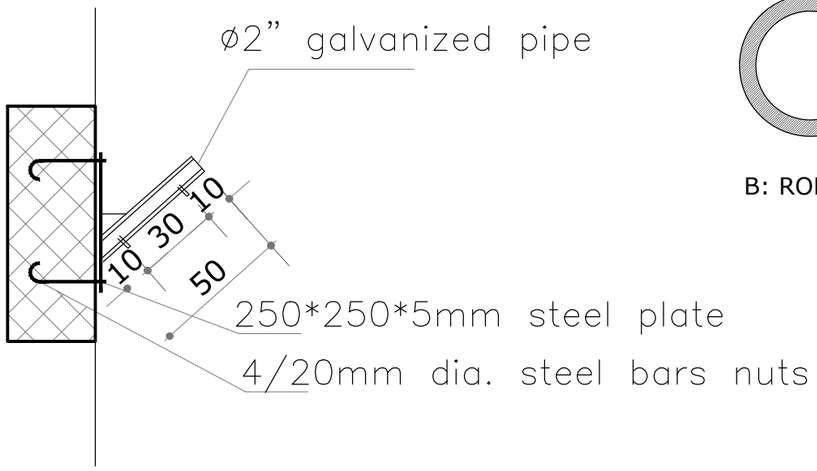

WALL MOUNTED FLAG POST

FLAG POST DETAIL

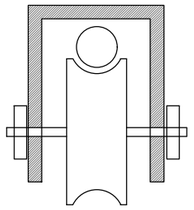

C: ROBE PULLY

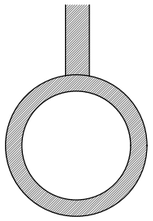

B: ROBE GUIDE

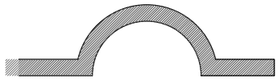

A: ROBE CATCHES

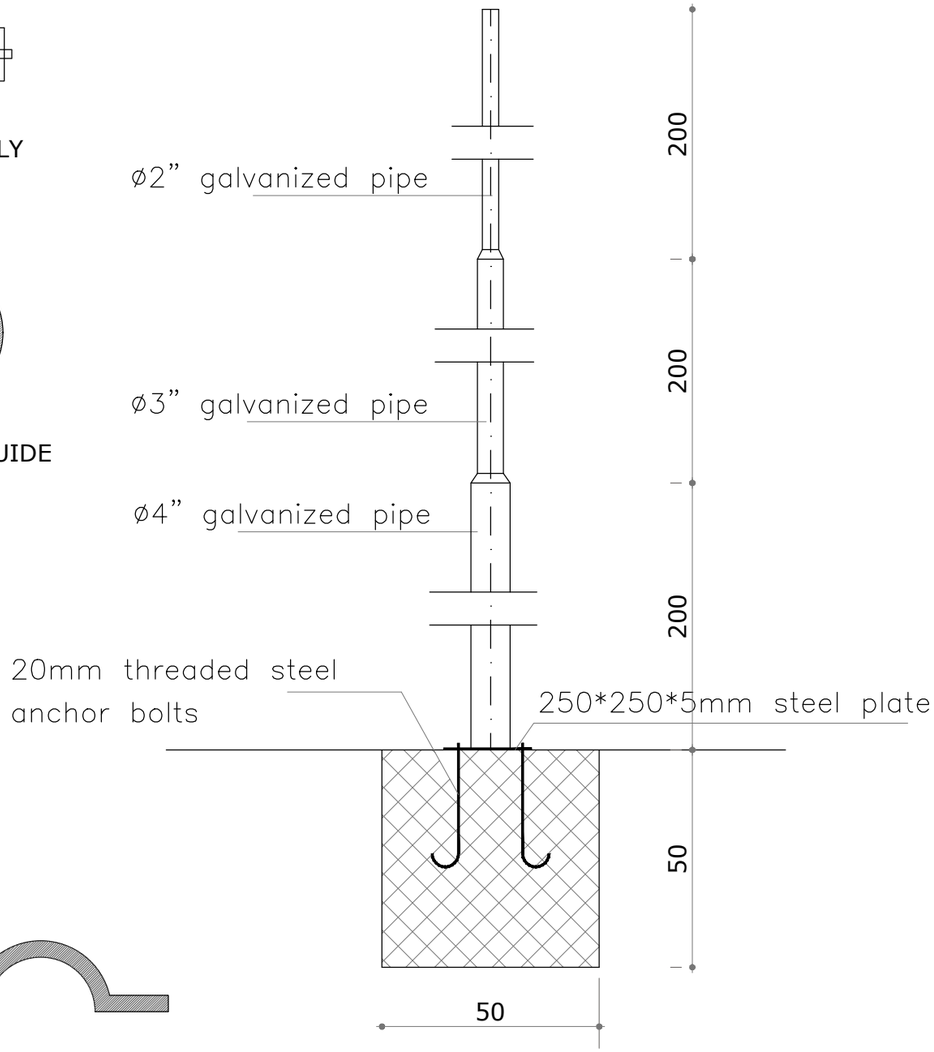

GROUND FIXED FLAG POST

ALL METAL WORKS INCLUDING SCREW SHALL BE FROM GALVANIZED STEEL AND PAINTED WITH 3 COATS OIL PAINT IN THE COLOR PM REQUESTED

P24-2023

PROJECT TITLE:

Al-Sheikh Saad Girls School External Works

REFERENCE :#	###

GENERAL REMARKS:

LEGEND &SAMBOLS:

Section Number
Details No.& .Sheet No.
Finish Floor Level
Ren .Concrete Level
Level In Plans
Windows Number
Door Number

Renfocement Concrete
Shear Walls
Plain Concrete
Concrete Block
Tiles
Stone
R.C.L Reni. Concrete Level
F.F.L Finish Floor Level
S.L Sea Level

REVISION HISTORY :

NO	DRAWINGS	DATE
REV01.	Preliminary Design	January24
REV02.		
REV03.		
REV04.		
REV05.		
REV06.		

CONTRACTING AUTHORITY :

Enabel -Belgian Development Agency

FUNDED BY:

Belgium partner in development

CONSULTANT:

ARAB ENGINEERS المهندسون العرب

Address :	Hebron -Halhul -Main Street -Natsha Building		
Telefax :	2251215 2 970+	Tel:	2226361 2 970+
Email :	info@arabengineers-Pal.com		
Website :	www.arabengineers-Pal.com		

SHEET NO.:	SHEET TITLE:
AD-404	Flag Post and Pole Typical Details

DESIGNER:	Arch .Malek Z .Murad
CHECKED BY:	
DRAWN BY:	Arch .Yesmain Raia
SCALE:	NTS
DATE:	29th January2024 /

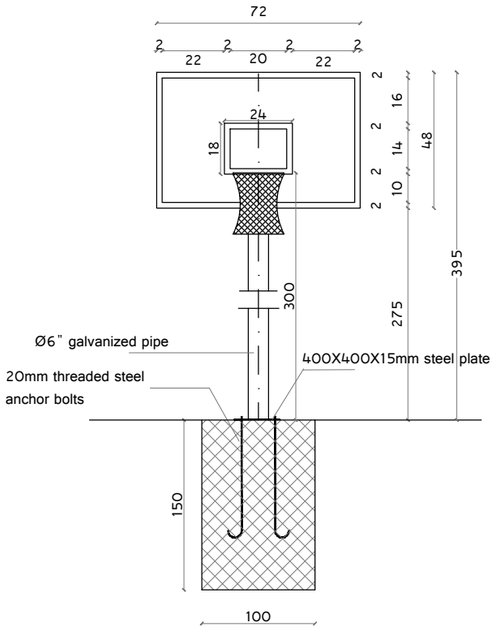

FRONT ELEVATION

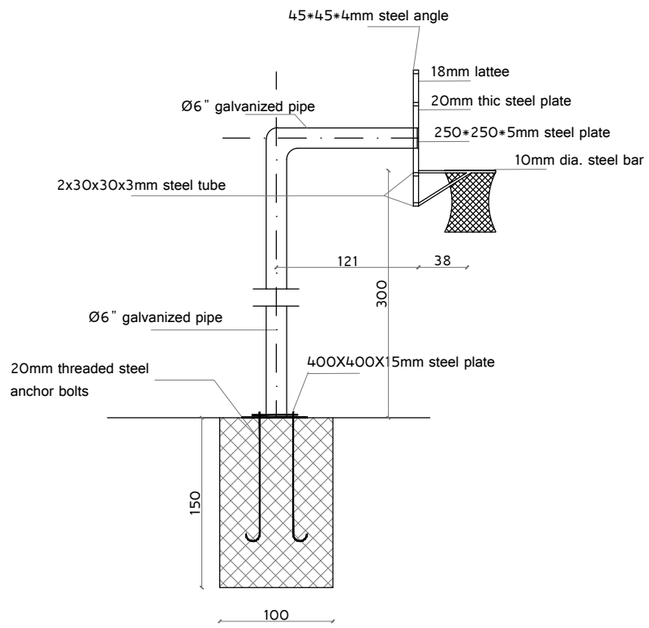

SIDE ELEVATION

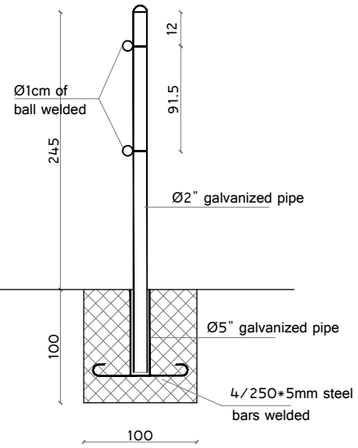

BASKET BALL BOARD DETAILS

VOLLY BALL POST

P24-2023

PROJECT TITLE:

Al-Sheikh Saad Girls School External Works

REFERENCE :#	###

GENERAL REMARKS:

LEGEND &SAMBOLS:

Section Number
Details No & Sheet No.
Finish Floor Level
Ren .Concrete Level
Level In Plans
Windows Number
Door Number

Reinfocement Concrete
Shear Walls
Plain Concrete
Concrete Block
Tiles
Stone
R.C.L Reni. Concrete Level
F.F.L Finish Floor Level
S.L Sea Level

REVISION HISTORY :

NO	DRAWINGS	DATE
REV01.	Preliminary Design	January24
REV02.		
REV03.		
REV04.		
REV05.		
REV06.		

CONTRACTING AUTHORITY :

Enabel -Belgian Development Agency

FUNDED BY:

Belgium partner in development

CONSULTANT:

ARAB ENGINEERS المهندسون العرب

Address :	Hebron -Halhul -Main Street -Natsha Building		
Telefax :	2251215 2 970+	Tel:	2226361 2 970+
Email :	info@arabengineers-Pal.com		
Website :	www.arabengineers-Pal.com		

SHEET NO.:	SHEET TITLE:
AD-405	Basket and Volley Balls Typical Details

DESIGNER:	Arch .Malek Z .Murad
CHECKED BY:	
DRAWN BY:	Arch .Yesmain Raia

SCALE:	NTS
DATE:	29th January2024 /

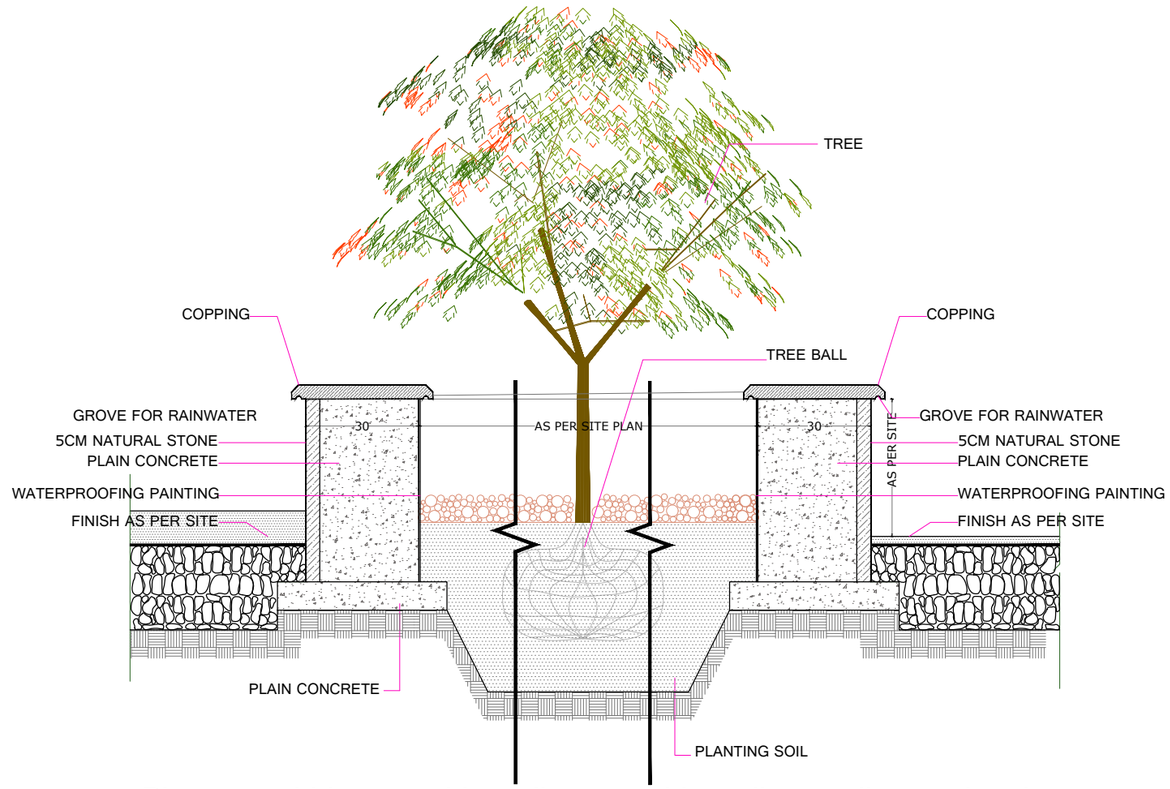

Planter could be one side wall or two side wall according to site plan

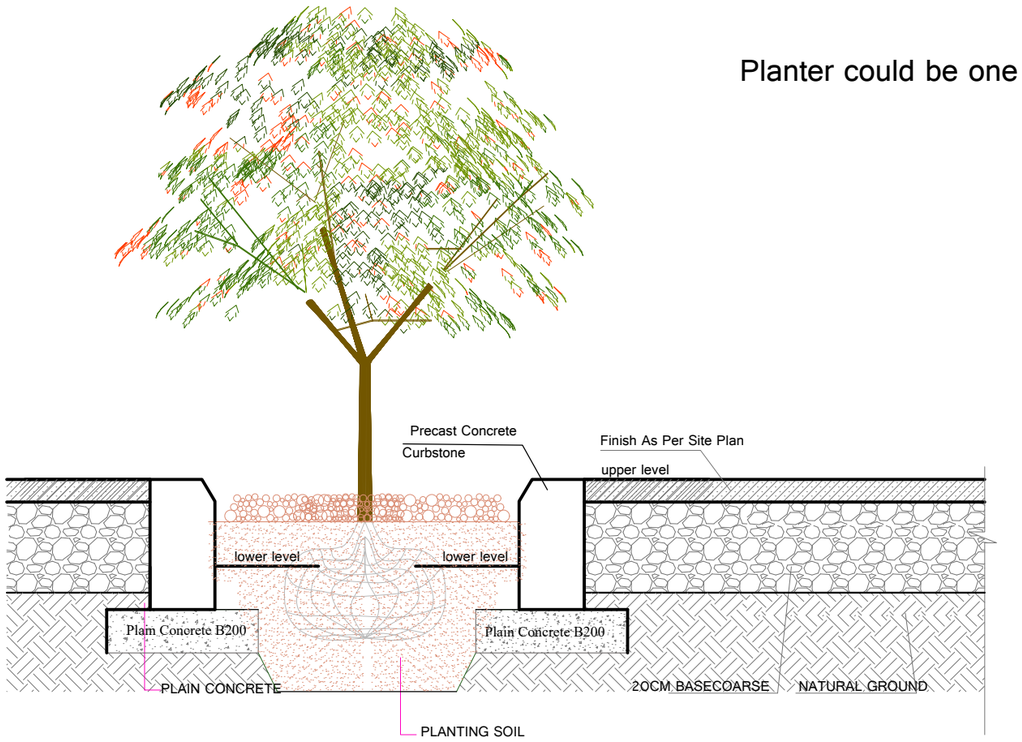

P24-2023

PROJECT TITLE:

Al-Sheikh Saad Girls School External Works

REFERENCE :#	###

GENERAL REMARKS:

LEGEND &SAMBOLS:

Section Number	Renfocement Concrete
Details No & .Sheet No.	Shear Walls
Finish Floor Level	Plain Concrete
Ren .Concrete Level	Concrete Block
Level In Plans	Tiles
Windows Number	Stone
Door Number	R.C.L Renf. Concrete Level
	F.F.L Finish Floor Level
	S.L Sea Level

REVISION HISTORY :

NO	DRAWINGS	DATE
REV01.	Preliminary Design	January24
REV02.		
REV03.		
REV04.		
REV05.		
REV06.		

CONTRACTING AUTHORITY :

Enabel -Belgian Development Agency

FUNDED BY:

Belgium partner in development

CONSULTANT:

ARAB ENGINEERS المهندسون العرب

Address :	Hebron -Halhul -Main Street -Natsha Building		
Telefax :	2251215 2 970+	Tel:	2226361 2 970+
Email :	info@arabengineers-Pal.com		
Website :	www.arabengineers-Pal.com		

SHEET NO.:	SHEET TITLE:
AD-406	Planters and Tress Typical Details

DESIGNER:	Arch .Malek Z .Murad
CHECKED BY:	
DRAWN BY:	Arch .Yesmain Raia

SCALE:	NTS
DATE:	29th January2024 /

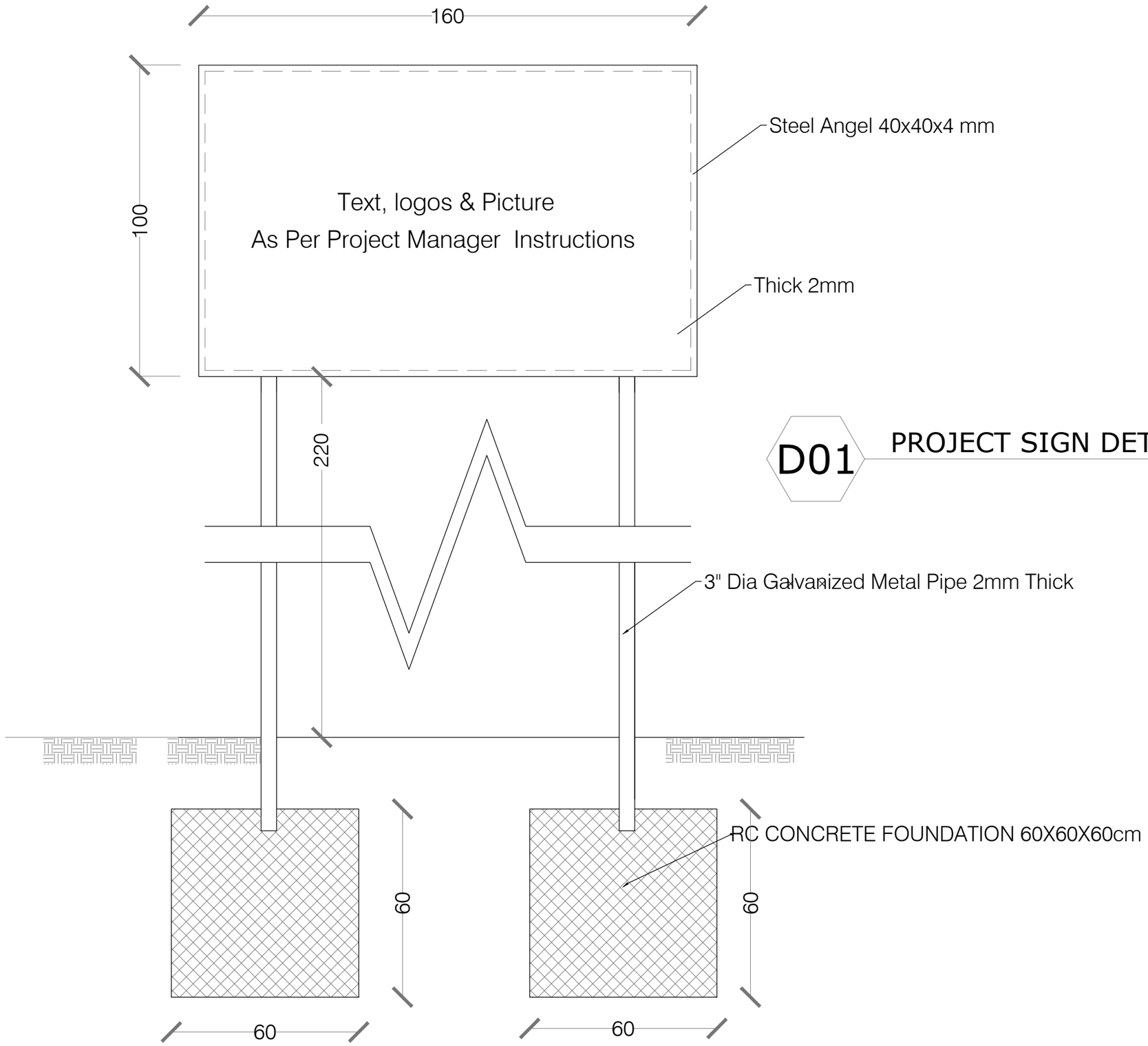

D01 PROJECT SIGN DETAIL

P24-2023

PROJECT TITLE:

Al-Sheikh Saad Girls School External Works

REFERENCE :#	###

GENERAL REMARKS:

LEGEND &SAMBOLS:

Section Number	Reinfocement Concrete
Details No & Sheet No.	Shear Walls
Finish Floor Level	Plain Concrete
Ren .Concrete Level	Concrete Block
Level In Plans	Tiles
Windows Number	Stone
Door Number	R.C.L Reni. Concrete Level
	F.F.L Finish Floor Level
	S.L Sea Level

REVISION HISTORY :

NO	DRAWINGS	DATE
REV01.	Preliminary Design	January24
REV02.		
REV03.		
REV04.		
REV05.		
REV06.		

CONTRACTING AUTHORITY :

Enabel

Enabel -Belgian Development Agency

FUNDED BY:

Belgium
partner in development

CONSULTANT:

ARAB ENGINEERS
المهندسون العرب

Address :	Hebron -Halhul -Main Street -Natsha Building		
Telefax :	2251215 2 970+	Tel:	2226361 2 970+
Email :	info@arabengineers-Pal.com		
Website :	www.arabengineers-Pal.com		

SHEET NO.:	SHEET TITLE:
AD-501	Project Temporary Sign Typical Details

DESIGNER:	Arch .Malek Z .Murad
CHECKED BY:	
DRAWN BY:	Arch .Yesmain Raia
SCALE:	NTS
DATE:	29th January2024 /

Price Includes Using Several Colors

Laser Cut Matt Ceramic Tiles 20x20x0.6 cm
Fixed with Adhesive Material and Motor

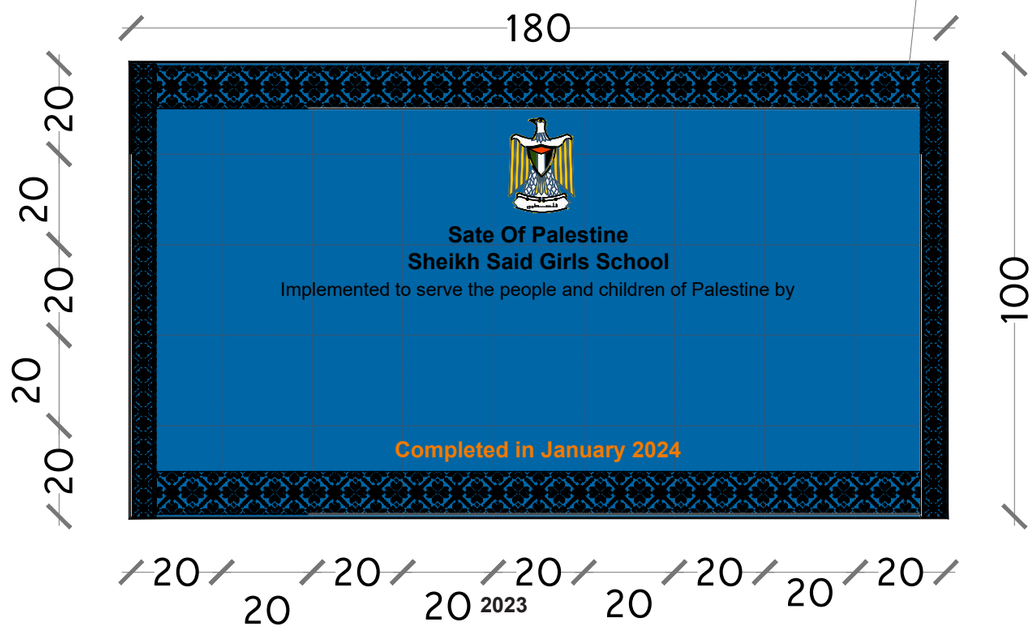

Notes:

- Color to Be Selected from Project Manger.
- All Text /Logos Shall be Printed in High Quality Method on the Tiles.
- Text ,logos ,Pattern &Picture As Per Project Manager Instructions.

P24-2023

PROJECT TITLE:
Al-Sheikh Saad Girls School External Works

REFERENCE :# ###

GENERAL REMARKS:

LEGEND &SAMBOLS:

Section Number
Details No.& Sheet No.
Finish Floor Level
Ren .Concrete Level
Level In Plans
Windows Number
Door Number

Reinfocement Concrete
Shear Walls
Plain Concrete
Concrete Block
Tiles
Stone
R.C.L Reni. Concrete Level
F.F.L Finish Floor Level
S.L Sea Level

REVISION HISTORY :

NO	DRAWINGS	DATE
REV01.	Preliminary Design	January24
REV02.		
REV03.		
REV04.		
REV05.		
REV06.		

CONTRACTING AUTHORITY :
Enabel -Belgian Development Agency

FUNDED BY:
Belgium partner in development

CONSULTANT:
ARAB ENGINEERS المهندسون العرب

Address :	Hebron -Halhul -Main Street -Natsha Building		
Telefax :	2251215 2 970+	Tel:	2226361 2 970+
Email :	info@arabengineers-Pal.com		
Website :	www.arabengineers-Pal.com		

SHEET NO.:	SHEET TITLE:
AD-502	Project Parliament Sign Typical Details

DESIGNER:	Arch .Malek Z .Murad
CHECKED BY:	
DRAWN BY:	Arch .Yesmain Raia

SCALE:	NTS
DATE:	29th January2024 /

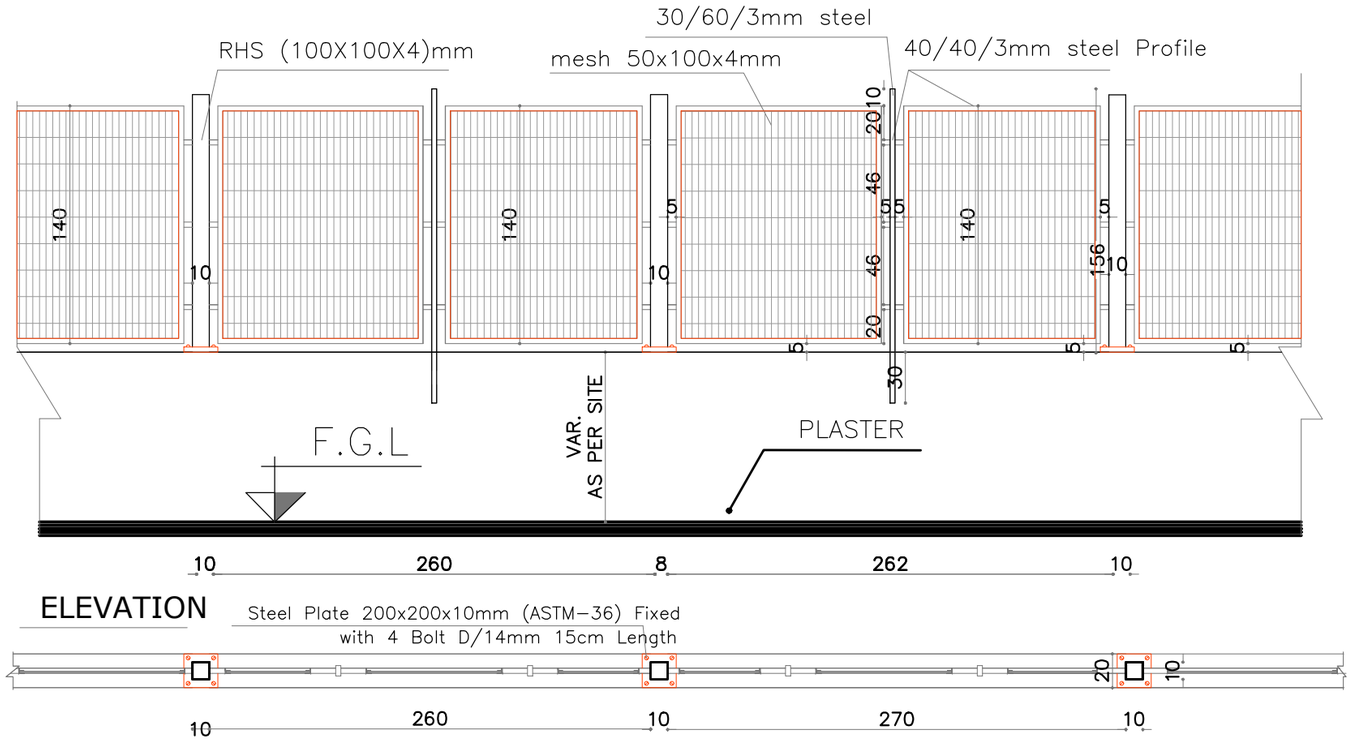

ALL METAL WORKS INCLUDING SCREW SHALL BE FROM GALVANIZED STEEL AND PAINTED WITH 3 COATS OIL PAINT IN THE COLOR PM REQUESTED

Boundary Wall Details

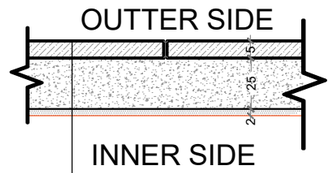

- 5cm NEUTRAL STONE
- BEDDING CONCRETE
- 3cm INSULATION (SPRAY FOAM)
- 10CM VOID (AIR)
- 10cm CONCRETE BLOCK
- 2cm CEMENT PLASTER & PAINT

Boundary Typical Section

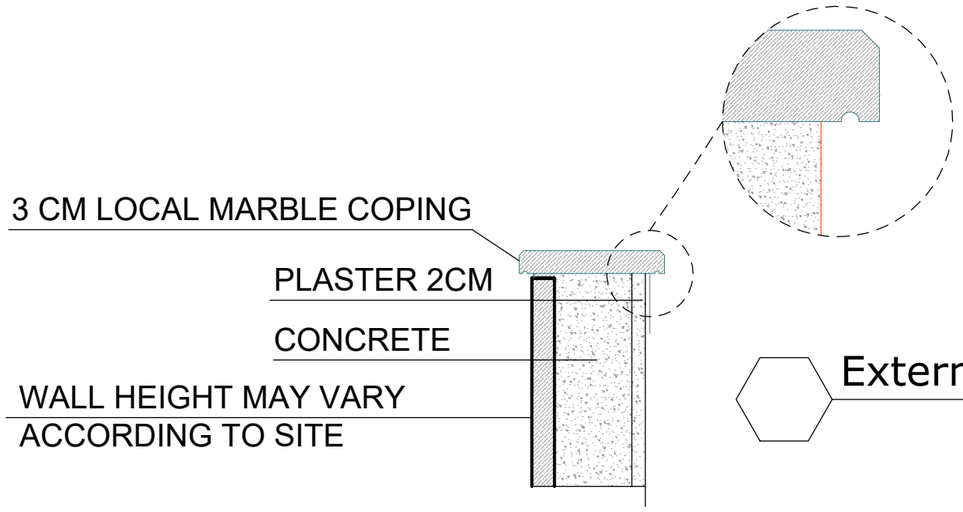

External Copping Typical Details

P24-2023

PROJECT TITLE:

Al-Sheikh Saad Girls School External Works

REFERENCE :#	###

GENERAL REMARKS:

LEGEND &SAMBOLS:

Section Number	Reinfocement Concrete
Details No & Sheet No.	Shear Walls
Finish Floor Level	Plain Concrete
Ren .Concrete Level	Concrete Block
Level In Plans	Tiles
Windows Number	Stone
Door Number	R.C.L Reni. Concrete Level
	F.F.L Finish Floor Level
	S.L Sea Level

REVISION HISTORY :

NO	DRAWINGS	DATE
REV01.	Preliminary Design	January24
REV02.		
REV03.		
REV04.		
REV05.		
REV06.		

CONTRACTING AUTHORITY :

Enabel -Belgian Development Agency

FUNDED BY:

Belgium partner in development

CONSULTANT:

ARAB ENGINEERS المهندسون العرب

Address :	Hebron -Halhul -Main Street -Natsha Building		
Telefax :	2251215 2 970+	Tel:	2226361 2 970+
Email :	info@arabengineers-Pal.com		
Website :	www.arabengineers-Pal.com		

SHEET NO.:	SHEET TITLE:
AD-503	Boundary Fence Typical Details

DESIGNER:	Arch .Malek Z .Murad
CHECKED BY:	
DRAWN BY:	Arch .Yesmain Raia
SCALE:	NTS
DATE:	29th January2024 /

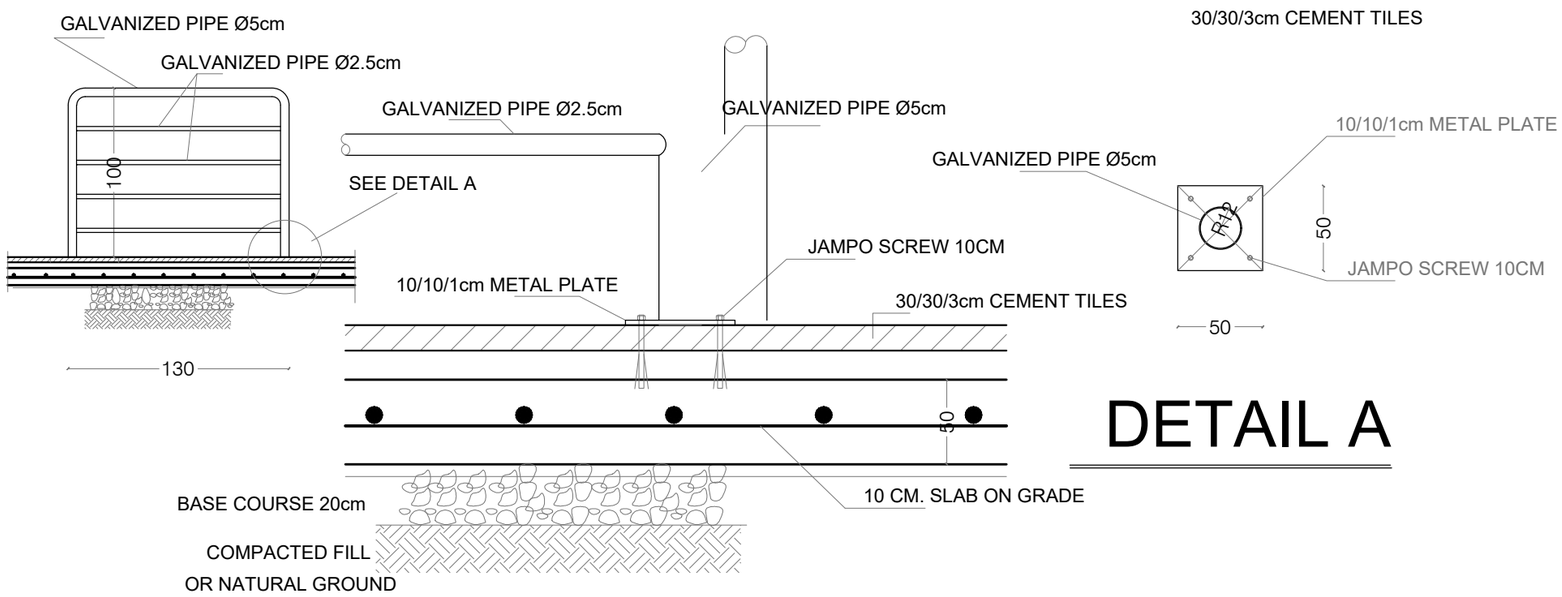

DETAIL A

P24-2023

PROJECT TITLE:

Al-Sheikh Saad Girls School External Works

REFERENCE :#	###

GENERAL REMARKS:

LEGEND &SAMBOLS:

Section Number	Reinfocement Concrete
Details No & Sheet No.	Shear Walls
Finish Floor Level	Plain Concrete
Ren .Concrete Level	Concrete Block
Level In Plans	Tiles
Windows Number	Stone
Door Number	R.C.L Reni. Concrete Level
	F.F.L Finish Floor Level
	S.L Sea Level

REVISION HISTORY :

NO	DRAWINGS	DATE
REV01.	Preliminary Design	January24
REV02.		
REV03.		
REV04.		
REV05.		
REV06.		

CONTRACTING AUTHORITY :

Enabel -Belgian Development Agency

FUNDED BY:

Belgium partner in development

CONSULTANT:

ARAB ENGINEERS المهندسون العرب

Address :	Hebron -Halhul -Main Street -Natsha Building		
Telefax :	2251215 2 970+	Tel:	2226361 2 970+
Email :	info@arabengineers-Pal.com		
Website :	www.arabengineers-Pal.com		

SHEET NO.:	SHEET TITLE:
AD-504	Canteen Handrails Typical Details

DESIGNER:	Arch .Malek Z .Murad
CHECKED BY:	
DRAWN BY:	Arch .Yesmain Raia
SCALE:	NTS
DATE:	29th January2024 /

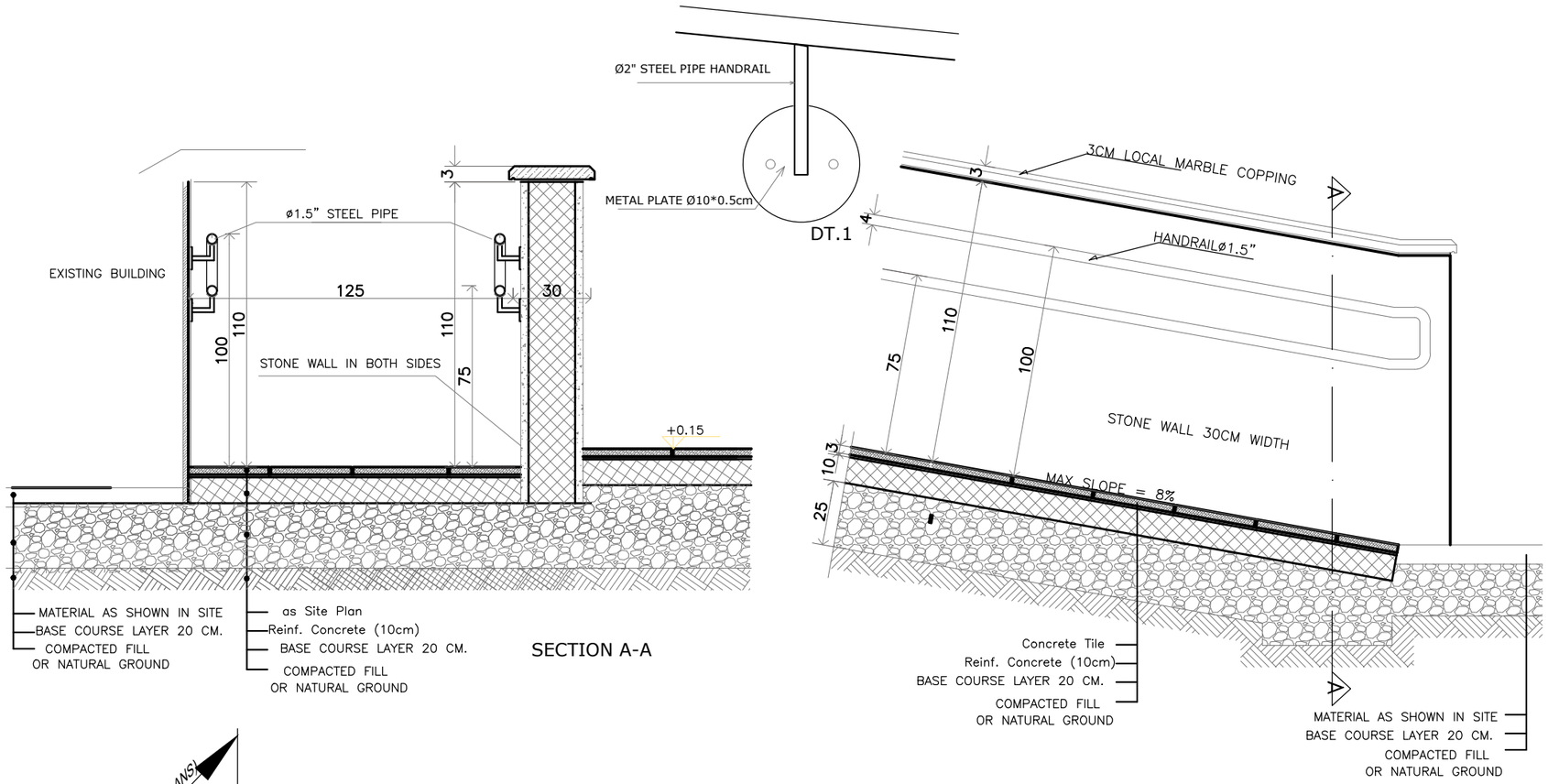

SECTION A-A

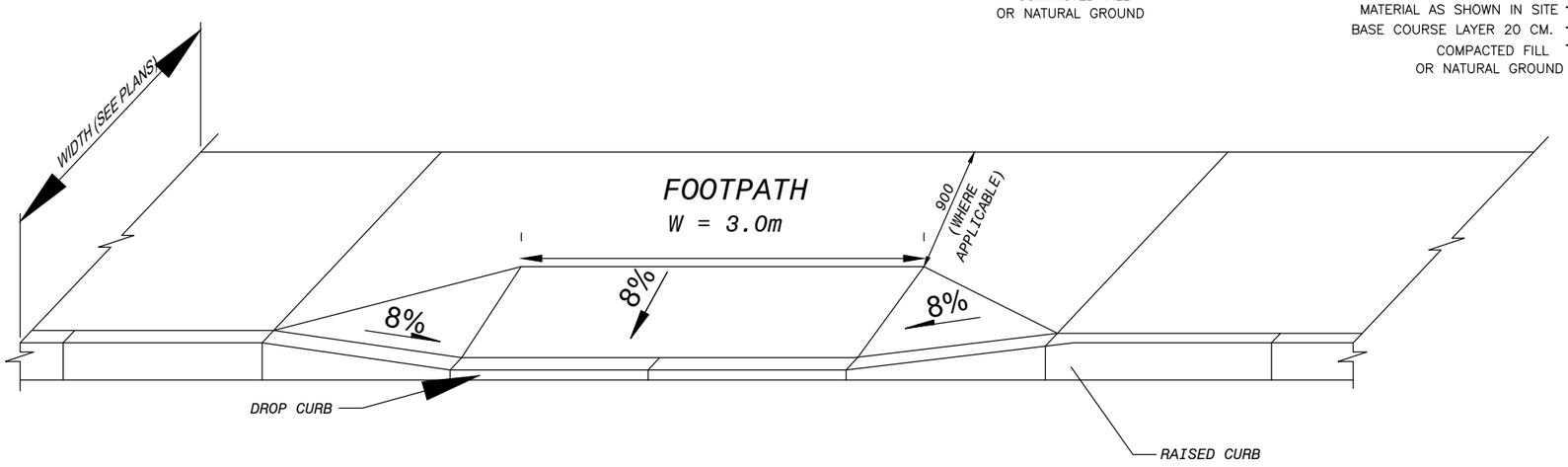

HANDICAP DETAIL IN SIDEWALKS & MEDIAN

NO SCALE

PEDESTRAIN CROSSING LINE MARKING

P24-2023

PROJECT TITLE:

Al-Sheikh Saad Girls School External Works

REFERENCE :#	###

GENERAL REMARKS:

LEGEND &SAMBOLS:

- Section Number
- Details No & Sheet No.
- Finish Floor Level
- Ren .Concrete Level
- Level In Plans
- Windows Number
- Door Number

- Reinfocement Concrete
- Shear Walls
- Plain Concrete
- Concrete Block
- Tiles
- Stone
- R.C.L Reni. Concrete Level
- F.F.L Finish Floor Level
- S.L Sea Level

REVISION HISTORY :

NO	DRAWINGS	DATE
REV01.	Preliminary Design	January24
REV02.		
REV03.		
REV04.		
REV05.		
REV06.		

CONTRACTING AUTHORITY :

Enabel -Belgian Development Agency

FUNDED BY:

Belgium partner in development

CONSULTANT:

ARAB ENGINEERS المهندسون العرب

Address :	Hebron -Halhul -Main Street -Natsha Building		
Telefax :	2251215 2 970+	Tel:	2226361 2 970+
Email :	info@arabengineers-Pal.com		
Website :	www.arabengineers-Pal.com		

SHEET NO.:	SHEET TITLE:
AD-505	Handicapped in Site Typical Details

DESIGNER:	Arch .Malek Z .Murad
CHECKED BY:	
DRAWN BY:	Arch .Yesmain Raia

SCALE:	NTS
DATE:	29th January2024 /