STATE OF PALESTINE

MINISTRY OF EDUCATION

D.G. Building

PROJECT NAME

Public works contract for the

'Construction of Al-Bakri Green Girls' School

In Hebron

CIVIL HANDBOOK OF DETAILS

Contracting Authority: Enabel

FUNDED BY: Belgium partner in development

NAVISION CODE: PSE22001-10075

Designed by Joint Venture

iproplan® Planungsgesellschaft mbH
Consulting Engineers And Architects

madar مدار
Consulting Engineers مهندسون إستشاريون
REGISTRATION No. 02
AL-BIREH - PALESTINE
TEL 02-2952022 / 2953145 FAX 02-2406157
E-mail: madar@madar-consulting.com P.O.BOX 3559

ISSUED FOR TENDERING

APRIL 2026

DRG. No. G-00

STRUCTURAL NOTES

I. GENERAL

1- ALL STRUCTURAL DRAWINGS SHALL BE READ IN CONJUNCTION WITH PERTINENT INFRA STRUCTURE, ARCHITECTURAL, MECHANICAL AND ELECTRICAL DRAWINGS, B.O.Q AND SPECIFICATIONS. IN CASE OF ANY DISCREPANCY, THE CONTRACTOR MUST CONTACT THE ENGINEER FOR CLARIFICATION.

2-ALL CONSTRUCTION MATERIALS TO WHICH REFERENCE IS MADE IN THE DRAWINGS AND IN THE TYPICAL DETAILS SHALL CONFORM TO THE APPLICABLE CODES AND STANDARDS FOR CONSTRUCTION AND TO THE SPECIFICATIONS.

3-THE CONTRACTOR MUST SUBMIT WORKSHOP DRAWINGS SHOWING PROPPING SYSTEMS, REINFORCEMENT DETAILS, AND ANY SPECIFIC ITEMS NOTED ON DRAWINGS, TO THE ENGINEER FOR APPROVAL.

4-CONSTRUCTION LOADS SHALL NOT EXCEED THE DESIGN LIVE LOAD PER SQUARE METER. PROVIDE ADEQUATE SHORING AND/OR BRACING WHERE THE STRUCTURE HAS NOT ATTAINED THE DESIGN STRENGTH.

5-BACKFILLING BEHIND BASEMENT WALLS SHOULD BE DONE FOR EACH FLOOR AFTER CONSTRUCTION OF THE SLAB OF THAT PARTICULAR FLOOR. PROVIDED WHERE STRUCTURE HAS NOT ATTAINED THE DESIGN STRENGTH

6-WHEN THE AMBIENT TEMPERATURE FALLS BELOW 5C OR RISES ABOVE 35, A RECORD SHALL BE KEPT OF CONCRETE TEMPERATURES AND PROTECTION GIVEN TO CONCRETE DURING PLACEMENT AND CURING.

7-DO NOT SCALE DIMENSIONS FROM DRAWINGS, USE ONLY WRITTEN DIMENSIONS.

8-ALL DIMENSIONS IN METERS OTHERWISE IS INDICATED.

9-ALL OPENINGS SHALL BE FORMED OR SLEEVED BEFORE PLACING CONCRETE. REFER TO ARCHITECTURAL, LANDSCAPE, CIVIL, MECHANICAL AND ELECTRICAL DRAWINGS FOR OPENINGS AND SLEEVES IN CONCRETE SLABS AND WALLS NOT SHOWN ON STRUCTURAL DRAWINGS, AND FOR SIZE AND LOCATION OF OPENINGS NOT DIMENSIONED. NO BREAKAGE IS ALLOWED IN CONCRETE AFTER CASTING.

10- ALL MATERIALS, WORKMANSHIP, WELDING AND TESTS SHALL CONFORM TO ASTM AND AWS STANDARDS.

11- IN CASE OF FUTURE EXTENSION, DOWELS SHALL BE WRAPPED WITH POLYETHYLENE SHEET AND PROTECTED WITH CONCRETE GRADE 21 MPa. POLYSTYRENE 50 mm THICK SHALL SEPARATE STRUCTURAL CONCRETE FROM PROTECTION CONCRETE.

12- ALL CONSTRUCTION AND WORKMANSHIP SHALL BE SUBJECTED TO INSPECTION, EXAMINATION AND TESTING BY THE ENGINEER, THE ENGINEER HAVE THE RIGHT TO REJECT DEFECTIVE MATERIALS AND WORKMANSHIP OR REQUIRE IT'S CORRECTION

13- SPECIAL MOTES AND DIMENSIONS INDICATED ON THE STRUCTURAL DRAWINGS SHALL BE COORDINATED WITH THE ARCHITECTURAL DRAWINGS. ARCHITECTURAL DRAWINGS SHALL BE USED TO DEFINE DETAILS CONFIGURATION, ELEVATION, OPENING JOINTS, SLOPES, ETC.

II. CONCRETE

1-COMPRESSIVE STRENGTH OF CONCRETE fcu AT 28 DAYS SHALL BE:-
- FOR COLUMNS & SHEAR WALLS----------B300
- FOR FOUNDATION ----------B300
- FOR SLABS, BEAMS, STAIR ----------B300
- FOR RETAINING WALLS----------B300
- FOR SLABS ON GRADE & BACKING STONE & PLANTED WALLS-----B300
- FOR RUBBLE CONCRETE ----------B300
- FOR BLINDING ----------B200

2-W/C = 0.45-0.50. & Max. AGGREGATE SIZE IS 25mm .

3-Portland CEMENT TYPE (CEM II 52.5 N/AM-SLV) COMPLYING WITH BS 12 SHALL BE USED FOR ALL ORDINARY CONCRETE WORKS.

4-Portland CEMENT TYPE (CEM 111/8 42.5 N-SR) COMPLYING WITH BS 12 SHALL BE USED FOR ACCELERATOR WALLS & SLABS, SEPTIC TANKS, SUMP PITS.

6-STRENGTH TESTS FOR CONCRETE SHALL BE ME MAD IN ACCORDANCE WITH BS 1881 "METHOD FOR TESTING CONCRETE"

7-THE CONTRACTOR MUST SUBMIT FOR APPROVAL THE CONCRETE MIX DESIGN FOR IT TO BE FOLLOWED IN CONSTRUCTION.

8-CONCRETE SHALL BE DEPOSITED, VIBRATED AND CURED IN ACCORDANCE WITH SPECIFICATIONS.

9-USE OF THE ADMIXTURE IS PERMITTED TO PRODUCE PROPER SLUMP AND WORKABILITY BUT SUBJECTED TO THE ENGINEER'S APPROVAL ADDITION OF WATER ON THE CONCRETE MIX IS NOT ALLOWED ON THE SITE

11-ALL INSERTS, ANCHOR BLOTS, ETC TO BE EMBEDDED IN THE CONCRETE SHALL BE HOT DIP GALVANIZED UNLESS NOTED OTHERWISE

CONCRETE GRADE	MINIMUM AVERAGE COMPRESSIVE STRENGTH		MINIMUM CEMENT CONTENT Kg/m³
	AFTER 7 DAYS Kg/cm²	AFTER 28 DAYS Kg/cm²	
B-250	220	290	250
B-300	260	345	350
B-400	350	460	350
B-450	390	518	450
B-500	435	575	450

III. REINFORCING STEEL

1-All REINFORCING STEEL BARS USED SHALL BE HIGH DEFORMED YIELD STEEL WITH A MINIMUM YIELD POINT STRENGTH OF (Fy=4200 kg/cm2) AND SHALL CONFORM TO BS 4449 TYPE (1) BARS .

2-Stirrup links shall be grade 4200 kg/cm2 conforming to BS 4449

3-Arrange top bars in beams such that overlaps along the beam are of equal length.

4- CONTRACTOR SHALL SUBMIT DETAILED SHOP DRAWINGS UNLESS OTHERWISE SHOWN, BAR BENDS, LAP SPLICES REINFORCEMENT DETAILS SHALL CONFORM TO ACI DETAILING MANUAL.

5- ALL REINFORCING BARS SHALL BE CLEAN OF RUST, GREASE OR OTHER MATERIALS LIKELY TO IMPAIR BOND.

ISSUED FOR TENDERING

NOTES:-

- ALL DIMENSIONS ARE IN M.UNLESS NOTED OTHERWISE
- ALL LEVELS ARE IN M. UNLESS NOTED OTHERWISE
- DO NOT SCALE FROM DRAWINGS.

STRUCTURAL NOTES:-

1- Allowable Bearing Pressure =3.5 kg/cm2 for isolated footing & 3.5 kg/cm2 for strip footing
Foundation Depth as shown in details.
2- Foundation designed for 4 floors
3- Use concrete :-
- B 300 for columns, column neck
- B 300 for foundations, slabs, shear & retaining walls and stairs.
- B 300 for slabs on grade.
- B 300 for baking stone walls and fence walls.
- B200 for blinding.
4- Concrete cover as follows:-
- 50mm for footings.
- 50mm for columns & ground beams below grade.
- 25mm for walls, columns, beams, and slabs.
5- All structural steel used is high tensile deformed bars of Fy = 4200 kg/cm2.
6- All concrete, structural steel, blocks must tested and approved by consultant.
7- All concrete members and works below finished gr. level must be insulated with two coats of bitumen.

LEGEND

SECTION NUMBER / REFERENCE SHEET NUMBER
DETAIL NUMBER / REFERENCE SHEET NUMBER
FLOOR FINISH LEVEL
FLOOR CONCRETE LEVEL
LEVEL SIGN IN PLAN
WINDOW NUMBER / REFERENCE SHEET NUMBER
DOOR NUMBER / REFERENCE SHEET NUMBER
RC CONCRETE FOR COL.
RC CONCRETE FOR WALLS
CONCRETE
STONE WALL
HOLLOW BLOCKS
INSOLATION MATERIAL

REVISIONS

No.	DESCRIPTION	DATE

OWNER: STATE OF PALESTINE
MINISTRY OF EDUCATION
D.G. BUILDINGS

PROJECT NO: 2501/2025

CONTRACTING AUTHORITY:
Enabel
ENABEL
Belgian Development Agency

FUNDED BY:
Belgium
partner in development

PROJECT NAME:
Public works contract for the 'Construction of Al-Bakri Green Girls' School In Hebron
Navision Code: PSE22001-10075

SHEET NAME:
STRUCTURAL NOTE I

LOCATION:
City: HEBRON
BLOCK: 34425 PLOT NO:232
GOVERNATE: HEBRON
QUARTER/ LOCATION: AL-SHAABA

JOINT VENTURE
iproplan® Planungsgesellschaft mbH Consulting Engineers Architects
Consulting Engineers
RAMALLAH - PALESTINE
TEL +970 (0)2970 2000/40 FAX +970 (0)2970 2007
E-mail: mail@mada-consulting.com P.O.BOX 3333

DESIGNED	Mohammad al bada	SCALE	1:100
CHECKED	Maysa abdelfattah	DATE	AUGUST 2025
APPROVED	Khaled Muhanna	DRG. No.	SD-01
DRAWN	AUTO CAD		

IV. CONCRETE PROTECTION

1-Unless otherwise indicated on drawings,the clear cover from face of concrete to reinforcement shall be as follows :

A-Footings ---------- 75 mm
B-All Sub-structure members ---------- 50 mm
C-Drop beams and columns ---------- 40 mm
D-All walls, beams, slabs in superstructures ---------- 30 mm

V. SOIL UNDER SLABS ON GRADE

1-Soil under slabs on grade shall be heavily compacted -in accordance with specifications - to 97% of the max. dry density using standard proctor compaction test .

2- SLABS ON GRADE SHALL BE LAID ON A LAYER OF POLYETHYLENE SHEETS 0.5mm THICK (GRADE 500).

VI. FOUNDATIONS :

1-THE FOUNDATION DESIGN IS BASED ON SOIL BEARING CAPACITY OF 3.5KG/CM2 (REPORT NO.SI-25-1487)
THEREFORE THE CONTRACTOR MUST OBTAIN THE VERIFICATION FROM GEO-TECHNICAL LAB TO GET THE ACTUAL VALUE FOR THE BEARING CAPACITY AND THE DEPTH OF THE FOUNDATIONS)

2-OVER EXCAVATED AREAS UNDER FOOTINGS MUST BE BACKFILLED WITH RUBBLE CONCRETE

3-ALL BACKFILLING SHALL BE SELECTED ACCORDING TO, TO THE SOIL INVESTIGATING REPORT, THE SPECIFICATIONS AND TO THE ENGINEER'S SATISFACTION

4-ALL BACKFILLING MATERIALS SHALL BE LAID IN LAYERS OF 20 cm THICKNESS EACH, COMPACTED AND TESTED - ACCORDING TO THE SPECIFICATIONS - TO 97% OF THE MAX DRY DENSITY AND TO THE ENGINEER;S SATISFACTION.

5-ALL CONCRETE MEMBERS AND WORKS BELOW FINISHED GROUND LEVEL MUST BE INSULATED WITH ONE COAT OF CM210

6-NATURAL GROUND MUST BE COMPACTED BEFORE LAYING BASE COURSE OR BLINDING.

VII. DESIGN & DETAILS CRITERIA :

1-DESIGN IS BASED ON THE ULTIMATE STRENGTH METHOD FOR ALL CONCRETE STRUCTURAL ELEMENTS

2-THE DESIGN & DETAILS ARE BASED ON ACI CODES & UNC 1997.

VIII. Min. Lap Splice and Embedment Lengths:

(a) WHERE BAR LENGTH IS NOT SPECIFIED, LONGEST PRACTICABLE BAR LENGTH SHALL BE EMPLOYED WITH STAGGERED LAP SPLICES.
LAP LENGTH SHALL BE A MINIMUM OF 60 TIMES THE BAR DIAMETER, UNLESS OTHERWISE NOTED.

BAR DIAMETER (mm)	BARS IN TENSION	BARS IN COMPRESSION
10	600	600
12	750	750
14	1000	1000
16	1000	1000
18	1100	1100
20	1200	1200
25	1500	1500
32	2000	2000
*S1 = 60ø		

IX. DESIGN & DETAILS CRITERIA :

Bar spacing "a" shall be not less than the greatest in the following three cases:

1) 25 mm
2) 1.5 d
3) 1.25 times the max. size of coarse aggregate.

X-Interval of bar splices

Lap splice with hook a > 0.5L	(i) a L; (ii) a < a' — Case "ii" shall be neglected in principle.
Lap splice without hook a > 0.5L	a — Hook shall be provided for round bar.
Gas pressure welding a > 40d	a

GIRDERS AND SUB-BEAMS

1-SPLICES OF REINFORCING BARS SHALL BE PROVIDED AT THE POSITION SHOWN IN THE DESIGN

2-HOOKS SHALL BE PROVIDED AT THE END OF EVERY CORNER BAR IN IN GIRDERS & SUB-BEAMS.

3-REINFORCING BARS OF GIRDERS SHALL BE ANCHORED OVER THE CENTER LINE OF COLUMN

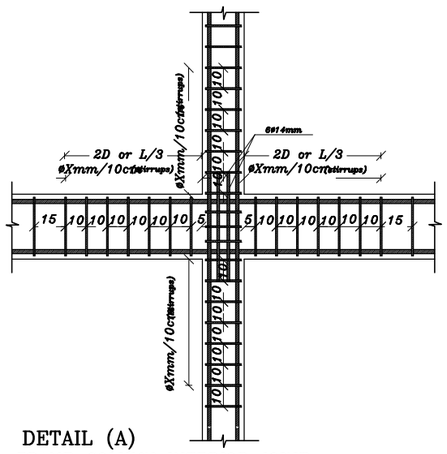

DETAIL (A)
FRAME-COLUMN INTERIOR JOINT
Scale 1:20

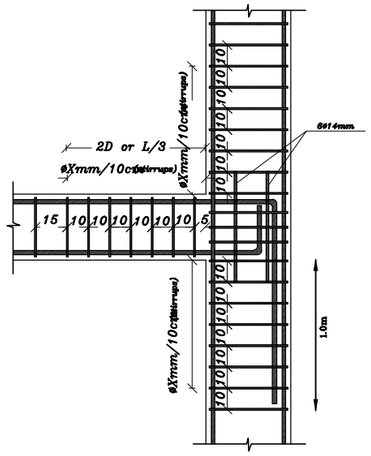

FRAME-COLUMN ETERIOR JOINT
Scale 1:20

2-Stirrups

THE SHAPE OF STIRRUPS SHALL BE IN ACCORDANCE WITH FIG (I) IN PRINCIPLE. FIG (II) AND (III) CAN BE USED TO L-BEAM AND T-BEAM RESPECTIVELY UNDER AN APPROVAL OF THE SUPERVISOR.

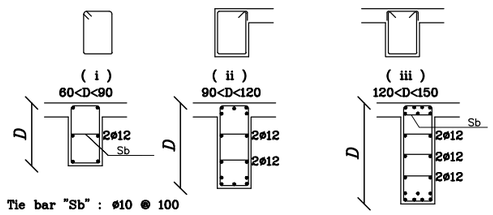

Tie bar "Sb" : ø10 @ 100

ISSUED FOR TENDERING

NOTES:-

- ALL DIMENSIONS ARE IN M.UNLESS NOTED OTHERWISE
- ALL LEVELS ARE IN M. UNLESS NOTED OTHERWISE
- DO NOT SCALE FROM DRAWINGS.

STRUCTURAL NOTES:-

1- Allowable Bearing Pressure =3.5 kg/cm2 for isolated footing & 3.5 kg/cm2 for strip footing
Foundation Depth as shown in details.
2- Foundation designed for 4 floors
3- Use concrete :-
- B 300 for columns, column neck
- B 300 for foundations, slabs, shear & retaining walls and stairs.
- B 300 for slabs on grade.
- B 300 for baking stone walls and fence walls.
- B200 for blinding.
4- Concrete cover as follows:-
- 50mm for footings.
- 50mm for columns & ground beams below grade.
- 25mm for walls, columns, beams, and slabs.
5- All structural steel used is high tensile deformed bars of Fy = 4200 kg/cm2.
6- All concrete, structural steel, blocks must tested and approved by consultant.
7- All concrete members and works below finished gr. level must be insulated with two coats of bitumen.

LEGEND

SECTION NUMBER / REFERENCE SHEET NUMBER
DETAIL NUMBER / REFERENCE SHEET NUMBER
FLOOR FINISH LEVEL
FLOOR CONCRETE LEVEL
LEVEL SIGN IN PLAN
WINDOW NUMBER / REFERENCE SHEET NUMBER
DOOR NUMBER / REFERENCE SHEET NUMBER
RC CONCRETE FOR COL.
RC CONCRETE FOR WALLS
CONCRETE
STONE WALL
HOLLOW BLOCKS
INSOLATION MATERIAL

REVISIONS

No.	DESCRIPTION	DATE

OWNER: STATE OF PALESTINE
MINISTRY OF EDUCATION
D.G. BUILDINGS

PROJECT NO: 2501/2025

CONTRACTING AUTHORITY: Enabel
ENABEL
Belgian Development Agency

FUNDED BY: Belgium partner in development

PROJECT NAME:
Public works contract for the 'Construction of Al-Bakri Green Girls' School In Hebron
Navision Code: PSE22001-10075

SHEET NAME:
STRUCTURAL NOTE II

LOCATION: City: HEBRON BLOCK: 34235 PLOT NO:232 GOVERNORATE: HEBRON QUARTER/ LOCATION: AL-SHAABA

JOINT VENTURE
iproplan Planungsgesellschaft mbH Consulting Engineers and Architects
Consulting Engineers

DESIGNED	Mohammad al bada	SCALE	1:100
CHECKED	Maysa abdelfattah	DATE	AUGUST 2025
APPROVED	Khaled Muhanna	DRG. No.	SD-02
DRAWN	AUTO CAD		

FLOOR SLAB

1–FLOOR OPENINGS (MAX. SIZE 600mmX600mm)

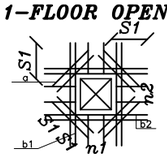

PROVIDE ADDITIONAL REINFORCEMENT BARS AT FLOOR OPENING

a: 2øMAX USED DIAMETER (DOUBLE LAYER)
b1= MAX OF 1/2 CUT BARS OR 2ø12 DOUBLE LAYERS
b2= MAX OF 1/2 CUT BARS OR 2ø12 DOUBLE LAYERS

REINFORCING BARS AT FLOOR OPENINGS 9WHICH IS OVER MAX. SIZE) ARE SHOWN IN STRUCTURAL DRAWINGS.

OPENING IN RIBBED SLABS

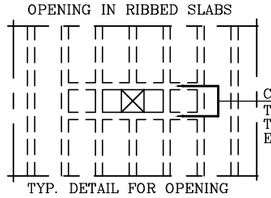

CROSS RIB TO TRANSFER THE LOAD OF THE CUT RIB TO TWO ADJACENT RIBS ON EACH SIDE OF THE OPENING

TYP. DETAIL FOR OPENING IN RIBBED SLABS (UNLESS SHOWN OTHERWISE)

2–CORNER OF CANTILEVER SLAB, EAVES & BALCONY

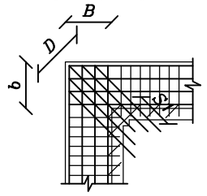

$D = \sqrt{B^2 + b^2}$

PLACE ø12 BARS TOP AND BOTTOM AT INTERVALS OF 200MM BETWEEN D AT THE CORNER OF CANTILEVER SLAB, EAVES AND BALCONY.

3–Reinforcing Bars for Level Difference

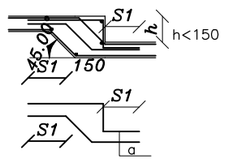

PLACE ADDITIONAL BARS WITH THE SAME DIA. AT THE SAME INTERVAL AS THAT OF MAIN BARS.

a: ADDITIONAL BARS

FORMWORK REMOVAL & SHORING

THE CONTRACTOR SHALL OBSERVE & UNDERTAKE THE FOLLOWING MEASURES:

1–NOTIFY DESIGN PROFESSIONAL PRIOR THE REMOVING FORMWORK

2–DO NOT REMOVE FORMS, SHORES & BRACING UNTIL CONCRETE HAS GAINED STRENGTH TO CARRY IT IS OWN WEIGHT, CONSTRUCTION AND DESIGN LOADS WHICH ARE LIABLE TO BE IMPOSED UPON IT. VERIFY STRENGTH OF CONCRETE BY COMPRESSIVE TEST STRENGTH

3–REMOVE FORMWORK PROGRESSIVELY AND IN ACCORDANCE WITH CODE REQUIREMENTS SO THAT NO SHOCK LOADS OR UNBALANCED LOADS ARE IMPOSED ON STRUCTURE

4–LOOSEN FORMS CAREFULLY. DO NOT WEDGE PRY BARS, HAMMERS, OR TOOLS AGAINST CONCRETE SURFACES.

5–THE MINIMUM PERIOD FOR FORM REMOVAL SHOULD BE AS FOLLOWS:

A–(48) HOURS FOR SIDE FORM OF BEAMS, COLUMNS & WALLS.
B–(14) DAYS FOR SLABS & BEAMS WITH SPAN LESS THAN 5M.
C–(21) DAYS FOR SLABS & BEAMS WITH SPAN MORE THAN 5M.
D–(28) DAYS FOR DROP BEAMS WITH SPAN MORE THAN 6M.
*THE CONTRACTOR MUST HAVE AN APPROVAL FORM THE CONSULTANT BEFORE START REMOVING THE FORMWORK

6–RESHORING AND SEQUENCE OF CONSTRUCTION SHALL BE CAREFULLY STUDIED AND CONSIDERED BY THE CONTRACTOR BEFORE CONSTRUCTION. THE CONTRACTOR MUST TAKE INTO ACCOUNT ANY CONSTRUCTION LOADS EXCEEDING THE DESIGN LOADS GIVEN IN DESIGN CRITERIA AND IS RESPONSIBLE FOR THE ADEQUACY OF ALL SUPPORTING ELEMENTS DURING CONSTRUCTION. SHORING SHALL NOT BE REMOVED UNTIL SUPPORTED ELEMENTS HAVE DEVELOPED DESIGN PROPERTIES REQUIRED TO SUPPORT ALL LOADS AND LIMIT DEFLECTIONS AND CRACKING AT TIME OF SHORING REMOVAL.

REINFORCED WALLS

1–Splices and Embedment

–GENERAL REINFORCED WALLS DETAILS OTHERWISE NOTED

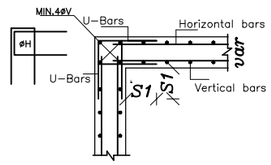

(1) Wall Connections See STRUCTURAL DETAIL

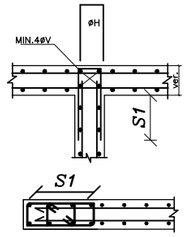

end of wall

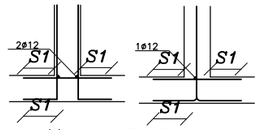

(2) Wall And Floor Slab

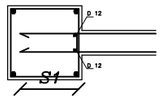

(3) Wall end to column

NOTE 1–MAX. OF:
1/2 CUTTED BARS
OR
2ø12 DOUBLE LAYER

NOTE 2–:
2 OF MAXIMUM USED DIAMETER
DOUBLE LAYER

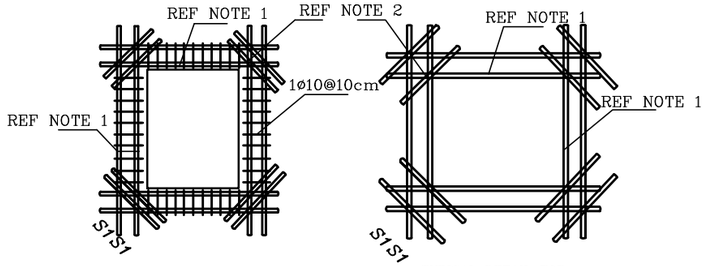

TYPICAL DETAIL FOR THE ELEVATION OPENING REINF.

TYPICAL DETAIL FOR THE FLOOR OPENING REINF.

EXCAVATION SHORING

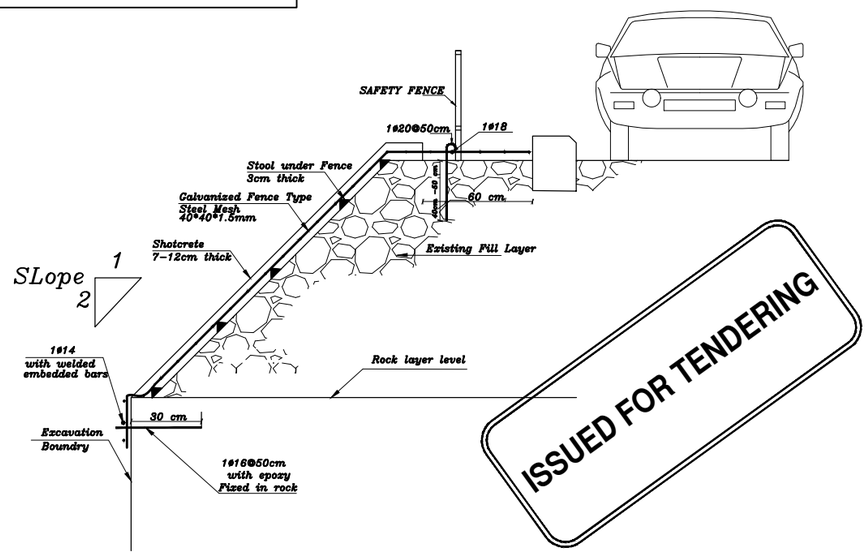

NOTES:–

- ALL DIMENSIONS ARE IN M.UNLESS NOTED OTHERWISE
- ALL LEVELS ARE IN M. UNLESS NOTED OTHERWISE
- DO NOT SCALE FROM DRAWINGS.

STRUCTURAL NOTES:–

1– Allowable Bearing Pressure =3.5 kg/cm2 for isolated footing & 3.5 kg/cm2 for strip footing
Foundation Depth as shown in details.
2– Foundation designed for 4 floors
3– Use concrete :–
- B 300 for columns, column neck
- B 300 for foundations, slabs, shear & retaining walls and stairs.
- B 300 for slabs on grade.
- B 300 for baking stone walls and fence walls.
- B200 for blinding.

4– Concrete cover as follows:–
- 50mm for footings.
- 50mm for columns & ground beams below grade.
- 25mm for walls, columns, beams, and slabs.

5– All structural steel used is high tensile deformed bars of Fy = 4200 kg/cm2.

6– All concrete, structural steel, blocks must tested and approved by consultant.

7– All concrete members and works below finished gr. level must be insulated with two coats of bitumen.

LEGEND

SECTION NUMBER / REFERENCE SHEET NUMBER
DETAIL NUMBER / REFERENCE SHEET NUMBER
FLOOR FINISH LEVEL
FLOOR CONCRETE LEVEL
LEVEL SIGN IN PLAN
WINDOW NUMBER / REFERENCE SHEET NUMBER
DOOR NUMBER / REFERENCE SHEET NUMBER
RC CONCRETE FOR COL.
RC CONCRETE FOR WALLS
CONCRETE
STONE WALL
HOLLOW BLOCKS
INSOLATION MATERIAL

REVISIONS

No.	DESCRIPTION	DATE

OWNER: STATE OF PALESTINE
MINISTRY OF EDUCATION
D.G. BUILDINGS

PROJECT NO: 2501/2025

CONTRACTING AUTHORITY: Enabel
ENABEL
Belgian Development Agency

FUNDED BY: Belgium partner in development

PROJECT NAME:
Public works contract for the 'Construction of Al-Bakri Green Girls' School In Hebron
Navision Code: PSE22001-10075

SHEET NAME:
STRUCTURAL NOTE III

LOCATION:
City: HEBRON GOVERNATE: HEBRON
BLOCK: 34425 PLOT NO:232 QUARTER/ LOCATION: AL-SHAJAIA

JOINT VENTURE
iproplan® Planungsgesellschaft mbH Consulting Engineers and Architects
Consulting Engineers

DESIGNED	Mohammad al bada	SCALE	1:100
CHECKED	Maysa abdelfattah	DATE	AUGUST 2025
APPROVED	Khaled Muhanna	DRG. No.	SD–03
DRAWN	AUTO CAD		

BLOCK WORKS

1- MINIMUM COMPRESSIVE STRENGTH FOR NON-LOAD BEARING HOLLOW BLOCKS SHALL BE 3.5 MPa.

2- MINIMUM COMPRESSIVE STRENGTH FOR NON-LOAD BEARING SOLID BLOCKS SHALL BE 7.0 MPa.

3- BLOCK WALLS 10 cm THICKNESS, NOT LOCATED DIRECTLY ON GROUND BEAMS, MAY BE BUILT DIRECTLY ON THE GROUND SLAB.

4- BLOCK WALLS 15 cm THICKNESS OR MORE, NOT LOCATED DIRECTLY ON GROUND BEAMS, SHALL BE PLACED ON THE DROPPED GROUND SLAB AS SHOWN IN THE TYPICAL DETAILS.

5- CONCRETE HOLLOW BLOCKS AT ENDS OF ROWS SHALL HAVE CLOSED SIDES TO PREVENT INGRESS OF CONCRETE.

6- ALL BLOCK WALLS EXCEEDING 3.0 m IN CLEAR HEIGHT SHALL BE PROVIDED WITH A STIFFENER BEAM AS SHOWN IN THE TYPICAL DETAILS.

7- ALL BLOCK WALLS WITH UNBRACED LENGTH EXCEEDING 5.0 m SHALL BE PROVIDED WITH A STIFFENER COLUMN AS SHOWN IN THE TYPICAL DETAILS.

SCHEDULE OF LINTELS REINFORCEMENT FOR BLOCK WORK

LINTEL WIDTH =b / CLEAR SPAN (mm)	b=100mm		b=150mm		b=200mm or 250mm		b=300mm		b=400mm		DEPTH= d (mm)
	TOP REINF.	BOTTOM REINF.	TOP REINF.	BOTTOM REINF.	TOP REINF.	BOTTOM REINF.	TOP REINF.	BOTTOM REINF.	TOP REINF.	BOTTOM REINF.	
< 2000	1Y10	1Y14	2Y10	2Y12	2Y10	2Y12	3Y10	3Y12	4Y10	4Y12	200
2000-3000	1Y10	1Y16	2Y10	2Y14	2Y10	2Y16	3Y10	3Y16	4Y10	4Y16	250
3010-4000	1Y10	1Y20	2Y10	2Y16	2Y10	2Y18	3Y12	3Y18	4Y12	4Y18	300
4010-5000	1Y10	1Y20	2Y10	2Y16	2Y10	2Y18	3Y12	3Y20	4Y12	4Y20	400
5010-6000	1Y10	1Y20	2Y10	2Y16	2Y10	2Y18	3Y12	3Y20	4Y12	4Y20	500
6010-7000	1Y12	1Y25	2Y12	4Y20 in 2 layers	2Y12	2Y25	3Y12	3Y25	4Y12	4Y25	600

NOTE: ALL LINTELS HAVE ø8 STIRRUPS/20CM

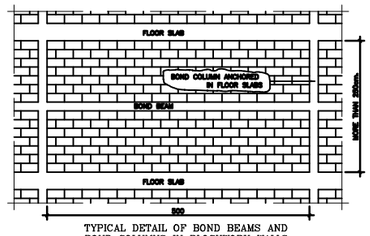

TYPICAL DETAIL OF BOND BEAMS AND BOND COLUMNS IN BLOCKWORK WALLS

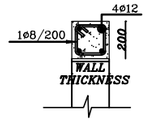

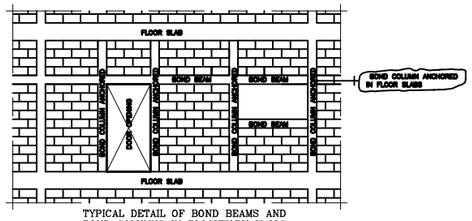

TYPICAL DETAIL OF BOND BEAMS AND BOND COLUMNS IN BLOCKWORK WALLS AROUND DOORS AND WINDOWS

WATER STOP DETAILS

BLOCK WALL CONNECTIONS DETAILS

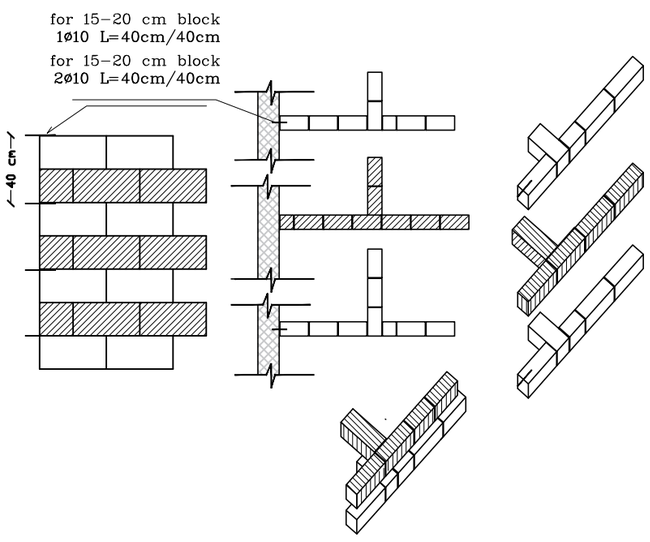

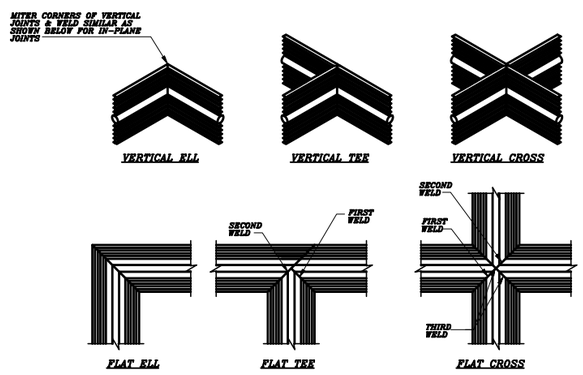

NOTES:

1. JOIN WATERSTOP TO FORM A CONTINUOUS UNBROKEN WATERSEAL.
2. ASSEMBLE 'TEES', 'CROSSES', AND 'ELLS' ACCURATELY.
3. SPLICE WATERSTOP IN ACCORDANCE WITH MANUFACTURER'S WRITTEN INSTRUCTIONS.
4. WELD TO PENETRATE FULL DEPTH OF THE WATERSTOP MATERIAL AT SPLICES.
5. ALL WELDS SHALL BE PER WATERSTOP MANUFACTURER'S RECOMMENDATIONS.

PVC WATERSTOP

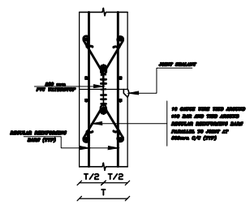

WATERSTOP ANCHORAGE WALL SECTION NTS

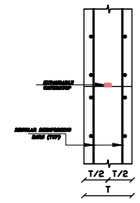

WATERSTOP ANCHORAGE WALL SECTION NTS

ISSUED FOR TENDERING

NOTES:-

- ALL DIMENSIONS ARE IN M.UNLESS NOTED OTHERWISE
- ALL LEVELS ARE IN M. UNLESS NOTED OTHERWISE
- DO NOT SCALE FROM DRAWINGS.

STRUCTURAL NOTES:-

1- Allowable Bearing Pressure =3.5 kg/cm2 for isolated footing & 3.5 kg/cm2 for strip footing
Foundation Depth as shown in details.
2- Foundation designed for 4 floors
3- Use concrete :-
- B 300 for columns, column neck
- B 300 for foundations, slabs, shear & retaining walls and stairs.
- B 300 for slabs on grade.
- B 300 for baking stone walls and fence walls.
- B200 for blinding.
4- Concrete cover as follows:-
- 50mm for footings.
- 50mm for columns & ground beams below grade.
- 25mm for walls, columns, beams, and slabs.
5- All structural steel used is high tensile deformed bars of Fy = 4200 kg/cm2.
6- All concrete, structural steel, blocks must tested and approved by consultant.
7- All concrete members and works below finished gr. level must be insulated with two coats of bitumen.

LEGEND

SECTION NUMBER / REFERENCE SHEET NUMBER
DETAIL NUMBER / REFERENCE SHEET NUMBER
FLOOR FINISH LEVEL
FLOOR CONCRETE LEVEL
LEVEL SIGN IN PLAN
WINDOW NUMBER / REFERENCE SHEET NUMBER
DOOR NUMBER / REFERENCE SHEET NUMBER
RC CONCRETE FOR COL.
RC CONCRETE FOR WALLS
CONCRETE
STONE WALL
HOLLOW BLOCKS
INSOLATION MATERIAL

REVISIONS

No.	DESCRIPTION	DATE

OWNER: STATE OF PALESTINE
MINISTRY OF EDUCATION
D.G. BUILDINGS

PROJECT NO: 2501/2025

CONTRACTING AUTHORITY: Enabel
ENABEL
Belgian Development Agency

FUNDED BY: Belgium
partner in development

PROJECT NAME:
Public works contract for the 'Construction of Al-Bakri Green Girls' School In Hebron
Navision Code: PSE22001-10075

SHEET NAME:
STRUCTURAL NOTE IV

LOCATION:
City: HEBRON GOVERNATE: HEBRON
BLOCK: 34435 PLOT NO:432 QUARTER/ LOCATION: AL-SHAABA

JOINT VENTURE
iproplan Planungsgesellschaft mbH Consulting Engineers and Architects
Consulting Engineers

DESIGNED	Mohammad al bada	SCALE	1:100
CHECKED	Maysa abdelfattah	DATE	AUGUST 2025
APPROVED	Khaled Muhanna	DRG. No.	SD-04
DRAWN	AUTO CAD		

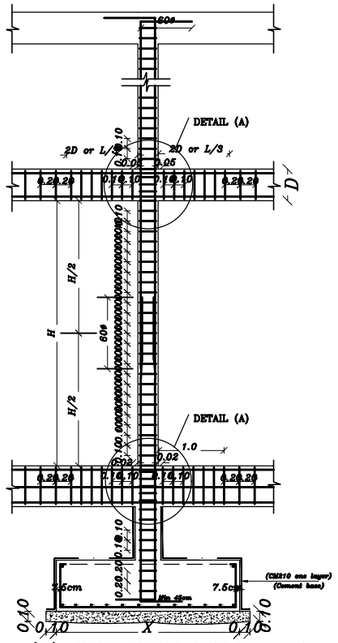

(D1) : TYPICAL SECTION AT THE INTERSECTION OF COLUMN AND BEAM

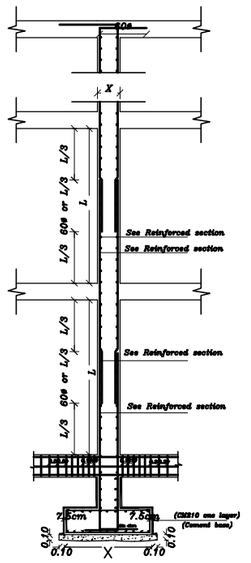

(D2) : TYPICAL SECTION AT THE SHEAR WALL

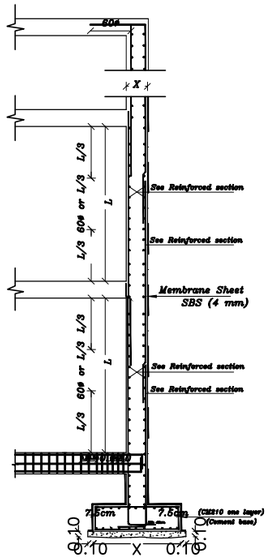

(D3):TYPICAL SECTION AT THE EXTERNAL B.WALL

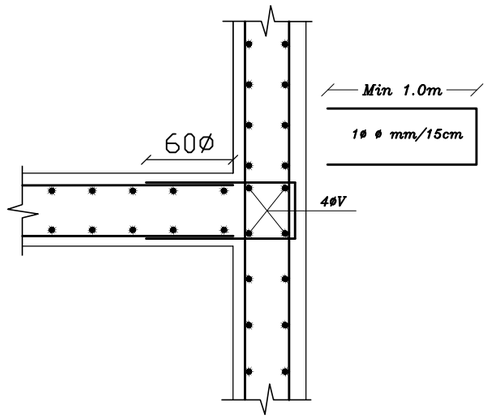

WALL–WALL INTERSECTION JOINT
Scale 1:20

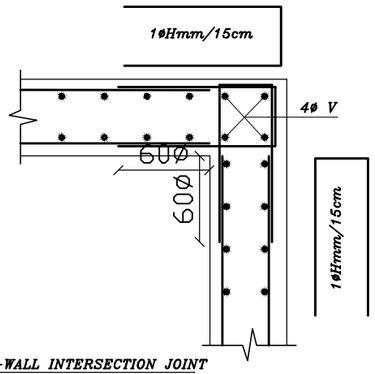

WALL–WALL INTERSECTION JOINT
Scale 1:20

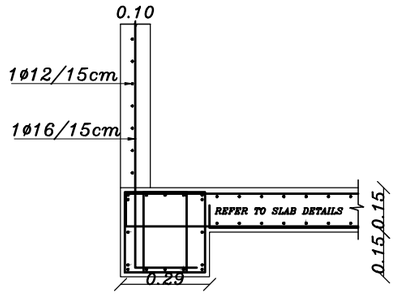

REFER TO BEAM DETAILS
STONE PLANTED WALLS DETAIL
SCALE 1:20

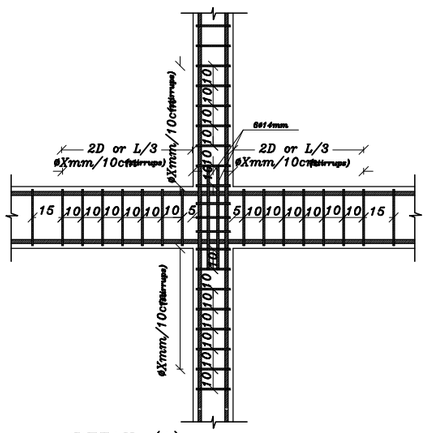

DETAIL (A)
FRAME–COLUMN INTERIOR JOINT
Scale 1:20

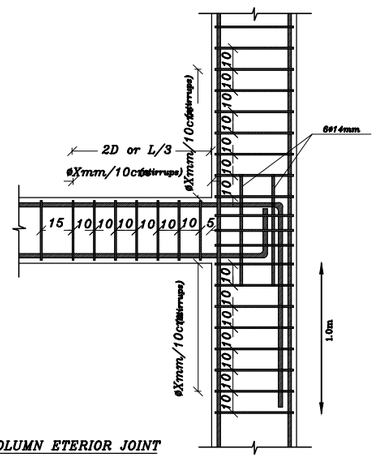

FRAME–COLUMN ETERIOR JOINT
Scale 1:20

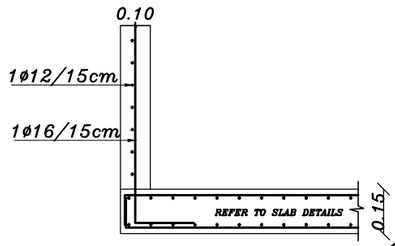

STONE PLANTED WALLS DETAIL
SCALE 1:20

ISSUED FOR TENDERING

NOTES:–

- ALL DIMENSIONS ARE IN M.UNLESS NOTED OTHERWISE
- ALL LEVELS ARE IN M. UNLESS NOTED OTHERWISE
- DO NOT SCALE FROM DRAWINGS.

STRUCTURAL NOTES:–

1– Allowable Bearing Pressure =3.5 kg/cm2 for isolated footing & 3.5 kg/cm2 for strip footing
Foundation Depth as shown in details.
2– Foundation designed for 4 floors
3– Use concrete :–
- B 300 for columns, column neck
- B 300 for foundations, slabs, shear & retaining walls and stairs.
- B 300 for slabs on grade.
- B 300 for baking stone walls and fence walls.
- B200 for blinding.

4– Concrete cover as follows:–
- 50mm for footings.
- 50mm for columns & ground beams below grade.
- 25mm for walls, columns, beams, and slabs.

5– All structural steel used is high tensile deformed bars of Fy = 4200 kg/cm2.

6– All concrete, structural steel, blocks must tested and approved by consultant.

7– All concrete members and works below finished gr. level must be insulated with two coats of bitumen.

LEGEND

SECTION NUMBER
REFERENCE SHEET NUMBER

DETAIL NUMBER
REFERENCE SHEET NUMBER

FLOOR FINISH LEVEL
FLOOR CONCRETE LEVEL

LEVEL SIGN IN PLAN

WINDOW NUMBER
REFERENCE SHEET NUMBER

DOOR NUMBER
REFERENCE SHEET NUMBER

RC CONCRETE FOR COL.
RC CONCRETE FOR WALLS
CONCRETE
STONE WALL
HOLLOW BLOCKS
INSOLATION MATERIAL

REVISIONS

No.	DESCRIPTION	DATE

OWNER: STATE OF PALESTINE
MINISTRY OF EDUCATION
D.G. BUILDINGS

PROJECT NO: 2501/2025

CONTRACTING AUTHORITY:
Enabel
ENABEL
Belgian Development Agency

FUNDED BY:
Belgium
partner in development

PROJECT NAME:
Public works contract for the 'Construction of Al-Bakri Green Girls' School In Hebron
Navision Code: PSE22001-10075

SHEET NAME:
STRUCTURAL NOTE V

LOCATION:
City: HEBRON
BLOCK: 34425 PLOT NO:232
GOVERNATE: HEBRON
QUARTER/ LOCATION: AL-SHAABA

JOINT VENTURE
iproplan® Planungsgesellschaft mbH
Consulting Engineers and Architects
Consulting Engineers

DESIGNED	Mohammad al bada	SCALE	1:100
CHECKED	Maysa abdelfattah	DATE	AUGUST 2025
APPROVED	Khaled Muhanna	DRG. No.	SD–05
DRAWN	AUTO CAD		

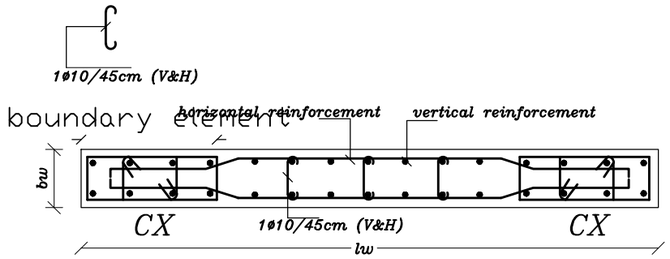

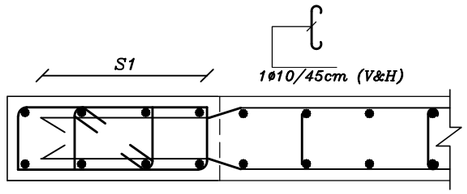

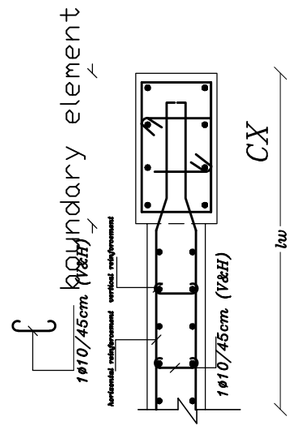

TYPICAL SECTION OF SHEAR WALL, BASEMENT WALL & ALL RC WALLS
Scale 1:20

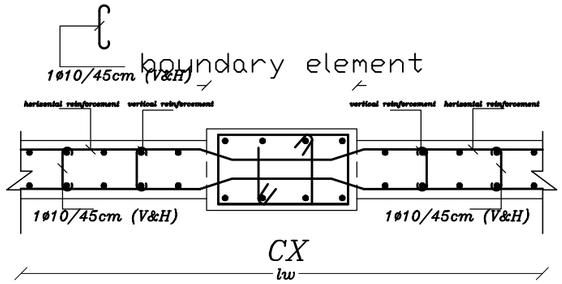

NOTE: ALL COLUMNS, STIFFENERS & BOUNDARY ELEMENTS ATTACHED OR IMBEDDED TO ALL RC WALLS WILL BE MEASURED TO REINFORCED CONCRETE WALL ITEM IN BOQ THE CONTRACTOR MUST TAKE THIS REQUIREMENT INTO WHILE PRICING

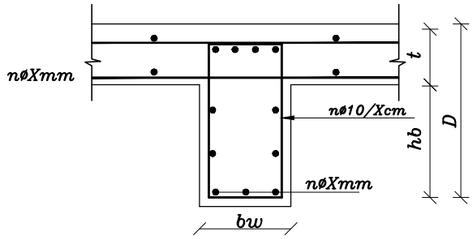

TYPICAL SECTION IN DROP BEAMS
Scale 1:20

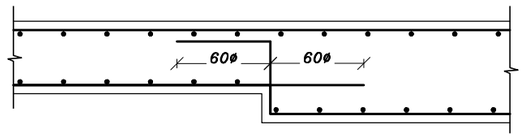

TYPICAL SECTION THROUGH DIFFERENT SLAB THICKNESSES
Scale 1:20

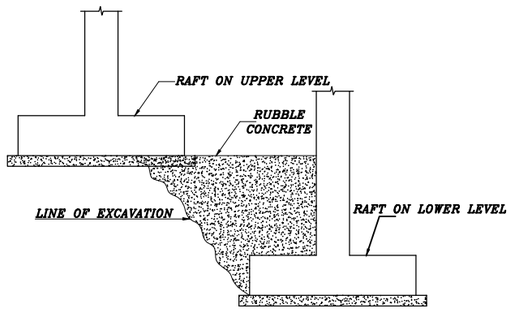

RAFT SPLIT LEVEL TYPICAL DETAIL
Scale 1:20

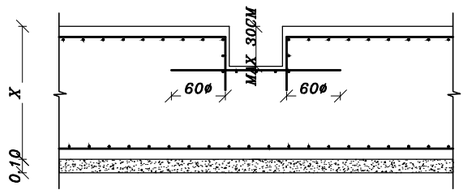

TYPICAL SECTION THROUGH TRENCHES / WASHOUT PITS
Scale 1:20

ISSUED FOR TENDERING

NOTES:–

- ALL DIMENSIONS ARE IN M.UNLESS NOTED OTHERWISE
- ALL LEVELS ARE IN M. UNLESS NOTED OTHERWISE
- DO NOT SCALE FROM DRAWINGS.

STRUCTURAL NOTES:–

1– Allowable Bearing Pressure =3.5 kg/cm2 for isolated footing & 3.5 kg/cm2 for strip footing
Foundation Depth as shown in details.
2– Foundation designed for 4 floors
3– Use concrete :–
- B 300 for columns, column neck
- B 300 for foundations, slabs, shear & retaining walls and stairs.
- B 300 for slabs on grade.
- B 300 for baking stone walls and fence walls.
- B200 for blinding.

4– Concrete cover as follows:–
- 50mm for footings.
- 50mm for columns & ground beams below grade.
- 25mm for walls, columns, beams, and slabs.

5– All structural steel used is high tensile deformed bars of Fy = 4200 kg/cm2.

6– All concrete, structural steel, blocks must tested and approved by consultant.

7– All concrete members and works below finished gr. level must be insulated with two coats of bitumen.

LEGEND

SECTION NUMBER
REFERENCE SHEET NUMBER

DETAIL NUMBER
REFERENCE SHEET NUMBER

FLOOR FINISH LEVEL
FLOOR CONCRETE LEVEL

LEVEL SIGN IN PLAN

WINDOW NUMBER
REFERENCE SHEET NUMBER

DOOR NUMBER
REFERENCE SHEET NUMBER

RC CONCRETE FOR COL.
RC CONCRETE FOR WALLS
CONCRETE
STONE WALL
HOLLOW BLOCKS
INSOLATION MATERIAL

REVISIONS

No.	DESCRIPTION	DATE

OWNER: STATE OF PALESTINE
MINISTRY OF EDUCATION
D.G. BUILDINGS

PROJECT NO: 2501/2025

CONTRACTING AUTHORITY:
Enabel
ENABEL
Belgian Development Agency

FUNDED BY:
Belgium
partner in development

PROJECT NAME:
Public works contract for the 'Construction of Al-Bakri Green Girls' School In Hebron
Navision Code: PSE22001-10075

SHEET NAME:
STRUCTURAL NOTE VI

LOCATION:
City: HEBRON GOVERNORATE: HEBRON
BLOCK: 34455 PLOT NO:232 QUARTER/ LOCATION: AL-SHAABA

JOINT VENTURE
iproplan® Planungsgesellschaft mbH Consulting Engineers and Architects
Consulting Engineers
REGISTRATION No. 02
PLASTEC - PALESTINE
TEL: 02-2965020 / 2965040
E-mail: info@plastec-consulting.com
FAX: 02-2965017
P.O.BOX 3020

DESIGNED	Mohammad al bada	SCALE	1:100
CHECKED	Maysa abdelfattah	DATE	AUGUST 2025
APPROVED	Khaled Muhanna	DRG. No.	SD–06
DRAWN	AUTO CAD		

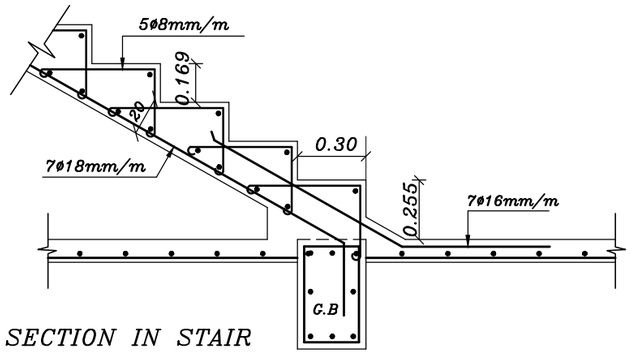

SECTION IN STAIR WITH FLOOR SLAB

SCALE 1:25

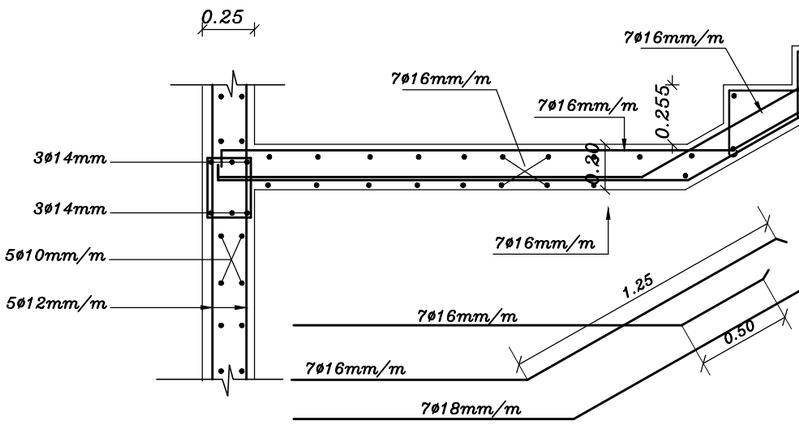

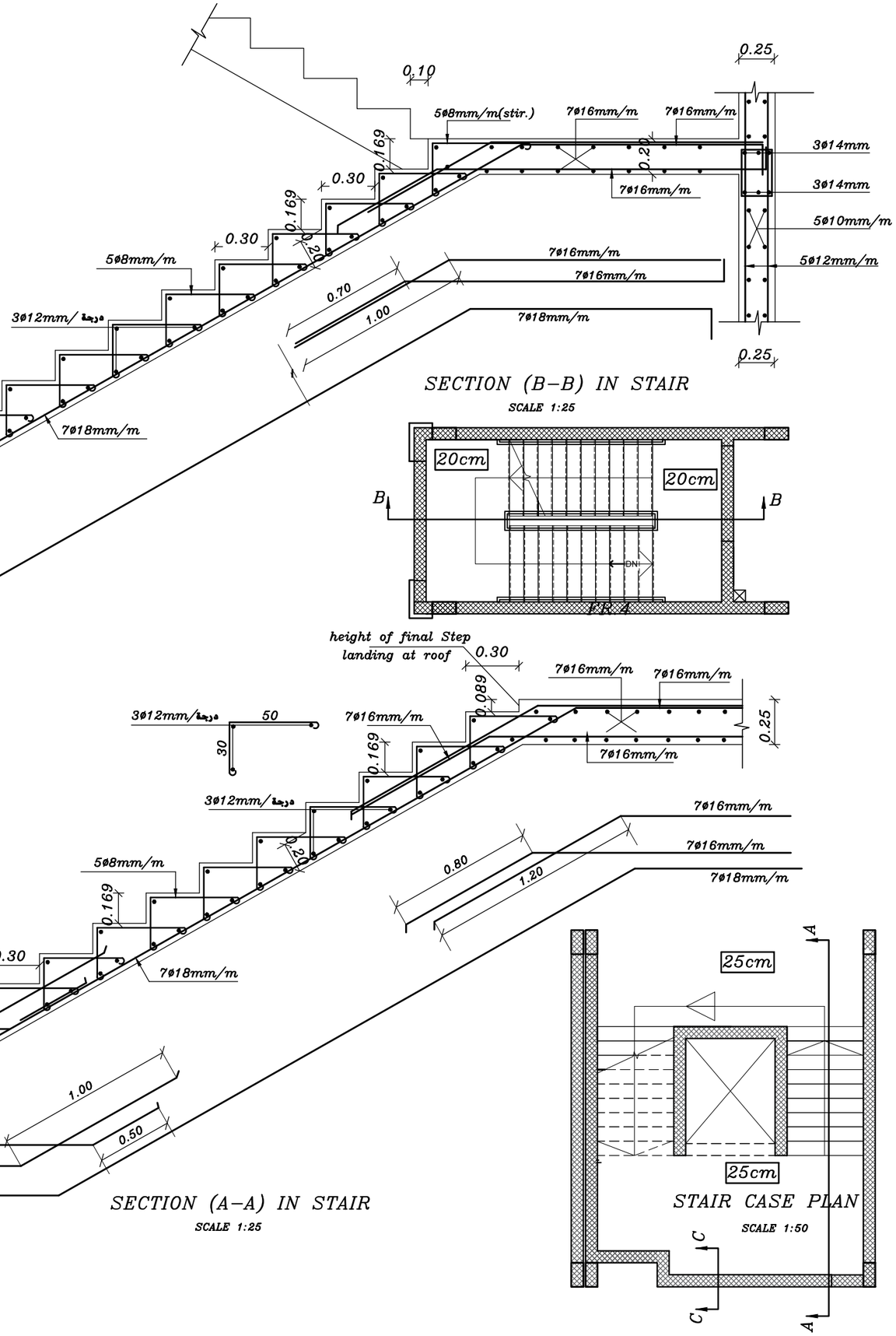

SECTION (B–B) IN STAIR

SCALE 1:25

SECTION (A–A) IN STAIR

SCALE 1:25

STAIR CASE PLAN

SCALE 1:50

ISSUED FOR TENDERING

NOTES:–

- ALL DIMENSIONS ARE IN M.UNLESS NOTED OTHERWISE
- ALL LEVELS ARE IN M. UNLESS NOTED OTHERWISE
- DO NOT SCALE FROM DRAWINGS.

STRUCTURAL NOTES:–

1– Allowable Bearing Pressure =3.5 kg/cm2 for isolated footing & 3.0 kg/cm2 for strip footing
Foundation Depth as shown in details.
2– Foundation designed for 4 floors
3– Use concrete :–
- B 300 for columns, column neck
- B 300 for foundations, slabs, shear & retaining walls and stairs.
- B 300 for slabs on grade.
- B 300 for balcing stone walls and fence walls.
- B200 for blinding.

4– Concrete cover as follows:–
- 50mm for footings.
- 50mm for columns & ground beams below grade.
- 25mm for walls, columns, beams, and slabs.

5– All structural steel used is high tensile deformed bars of Fy = 4200 kg/cm2.

6– All concrete, structural steel, blocks must tested and approved by consultant.

7– All concrete members and works below finished gr. level must be insulated with two coats of bitumen.

LEGEND

SECTION NUMBER
REFERENCE SHEET NUMBER

DETAIL NUMBER
REFERENCE SHEET NUMBER

FLOOR FINISH LEVEL
FLOOR CONCRETE LEVEL

LEVEL SIGN IN PLAN

WINDOW NUMBER
REFERENCE SHEET NUMBER

DOOR NUMBER
REFERENCE SHEET NUMBER

RC CONCRETE FOR COL.
RC CONCRETE FOR WALLS
CONCRETE
STONE WALL
HOLLOW BLOCKS
INSOLATION MATERIAL

REVISIONS

No.	DESCRIPTION	DATE

OWNER:
STATE OF PALESTINE
MINISTRY OF EDUCATION
D.G. BUILDINGS

PROJECT NO: 2501/2025

CONTRACTING AUTHORITY:
Enabel
ENABEL
Belgian Development Agency

FUNDED BY:
Belgium
partner in development

PROJECT NAME:
Public works contract for the 'Construction of Al-Bakri Green Girls' School In Hebron
Navision Code: PSE22001-10075

SHEET NAME:
PROTOTYPE STRUCTURAL DETAILS FOR STAIRCASE

LOCATION:
City: HEBRON GOVERNATE: HEBRON
BLOCK: 34425 PLOT NO:232 QUARTER/ LOCATION: AL-SHAABA

JOINT VENTURE
iproplan® Planungsgesellschaft mbH Consulting Engineers And Architects
Consulting Engineers مهندسون استشاريون
RAMALLAH-ALBIREH, AL-BIREH - PALESTINE
TEL: 02-2952650 / 2952145 FAX: 02-2406157
E-mail: medad@medad-consulting.com P.O.BOX 3550

DESIGNED	Mohammad al bada		SCALE	
CHECKED	Maysa abdelfattah		DATE	AUGUST 2025
APPROVED	Khaled Muhanna		DRG. No.	SD–07
DRAWN	AUTO CAD			

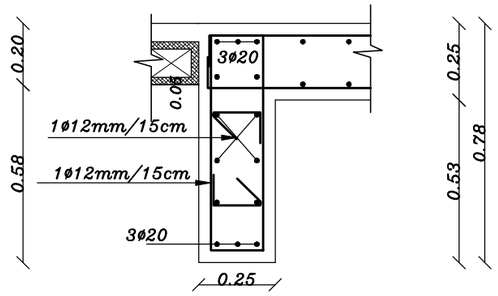

SECTION IN C–C
IN STAIRCASE
SCALE 1:20

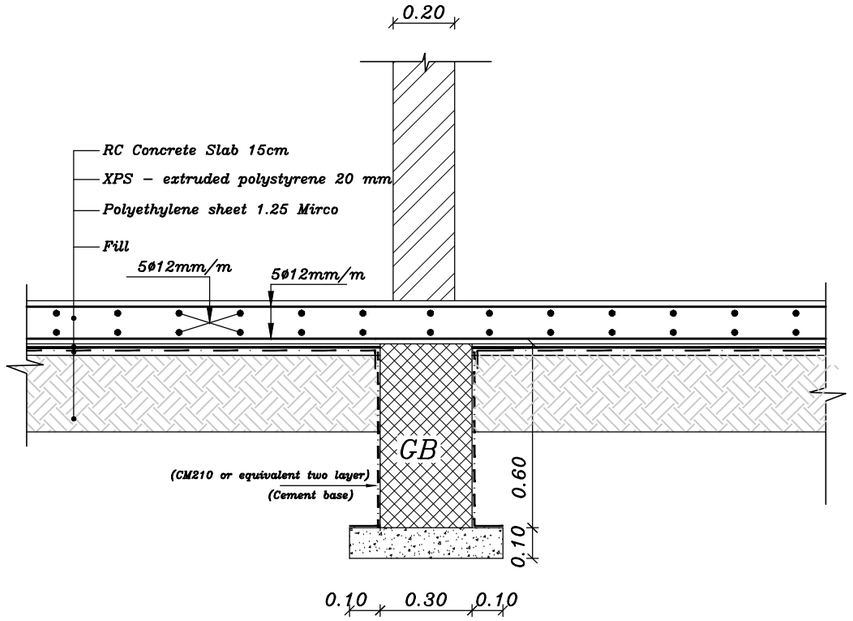

TYPICAL SECTION IN GROUND BEAM & SLAB
WITH BLOCK WALL
SCALE 1:20

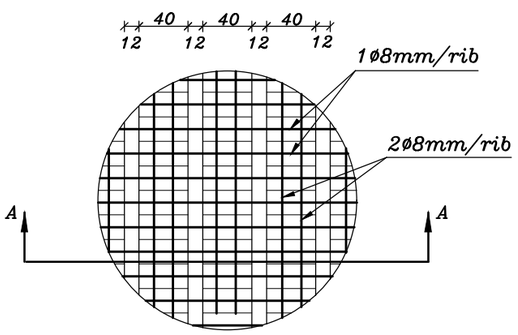

DETAIL (A)

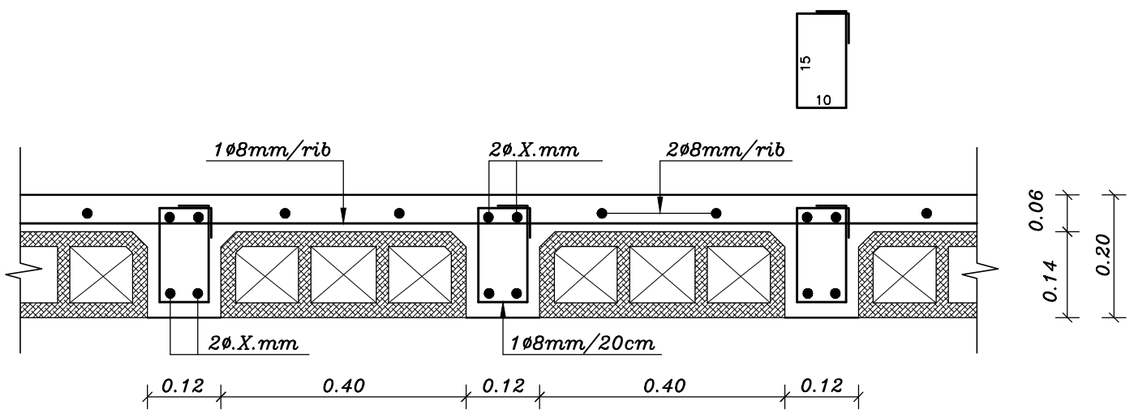

Section A – A
TYPICAL SECTION IN RIB SLAB

VALUE OF X: depends on slab steel details in
S–14, S–15, S–16,S–17 and S–18

ISSUED FOR TENDERING

NOTES:–

- ALL DIMENSIONS ARE IN M.UNLESS NOTED OTHERWISE
- ALL LEVELS ARE IN M. UNLESS NOTED OTHERWISE
- DO NOT SCALE FROM DRAWINGS.

STRUCTURAL NOTES:–

1– Allowable Bearing Pressure =3.5 kg/cm2 for isolated footing & 3.0 kg/cm2 for strip footing
Foundation Depth as shown in details.
2– Foundation designed for 4 floors
3– Use concrete :–
- B 300 for columns, column neck
- B 300 for foundations, slabs, shear & retaining walls and stairs.
- B 300 for slabs on grade.
- B 300 for baking stone walls and fence walls.
- B200 for blinding.

4– Concrete cover as follows:–
- 50mm for footings.
- 50mm for columns & ground beams below grade.
- 25mm for walls, columns, beams, and slabs.

5– All structural steel used is high tensile deformed bars of Fy = 4200 kg/cm2.

6– All concrete, structural steel, blocks must tested and approved by consultant.

7– All concrete members and works below finished gr. level must be insulated with two coats of bitumen.

LEGEND

SECTION NUMBER
REFERENCE SHEET NUMBER

DETAIL NUMBER
REFERENCE SHEET NUMBER

FLOOR FINISH LEVEL
FLOOR CONCRETE LEVEL

LEVEL SIGN IN PLAN

WINDOW NUMBER
REFERENCE SHEET NUMBER

DOOR NUMBER
REFERENCE SHEET NUMBER

RC CONCRETE FOR COL.
RC CONCRETE FOR WALLS
CONCRETE
STONE WALL
HOLLOW BLOCKS
INSOLATION MATERIAL

REVISIONS

No.	DESCRIPTION	DATE

OWNER: STATE OF PALESTINE
MINISTRY OF EDUCATION
D.G. BUILDINGS

PROJECT NO: 2501/2025

CONTRACTING AUTHORITY:
Enabel
ENABEL
Belgian Development Agency

FUNDED BY:
Belgium
partner in development

PROJECT NAME:
Public works contract for the
'Construction of Al-Bakri Green Girls' School
In Hebron
Navision Code: PSE22001-10075

SHEET NAME:
PROTOTYPE STRUCTURAL DETAILS
FOR G.B & RIB SLAB

LOCATION:
City: HEBRON GOVERNATE: HEBRON
BLOCK: 34425 PLOT NO:232 QUARTER/ LOCATION: AL-SHAABA

JOINT VENTURE
iproplan® Planungsgesellschaft mbH Consulting Engineers And Architects
Consulting Engineers
REGISTRATION No. 10
HEBRON - PALESTINE
TEL 02-2950300 - 0599149
E-mail: medar@medar-consulting.com
AX 02-9404157
P.O.BOX 3030

DESIGNED	Mohammad al bada		SCALE	
CHECKED	Maysa abdelfattah		DATE	AUGUST 2025
APPROVED	Khaled Muhanna		DRG. No.	S–08
DRAWN	AUTO CAD			

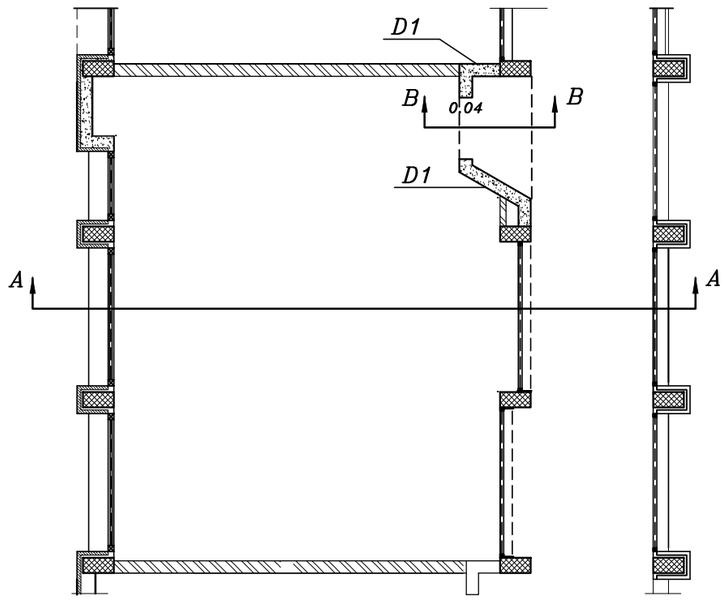

CLASS ROOM PLAN
Scale 1:100

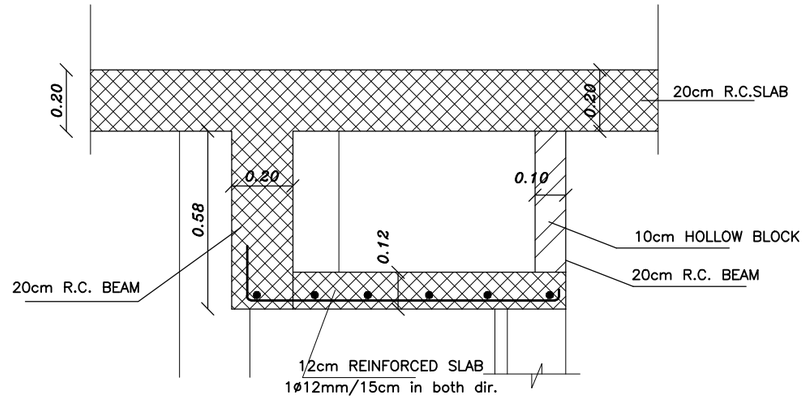

SEC. (B–B)
Scale 1:20

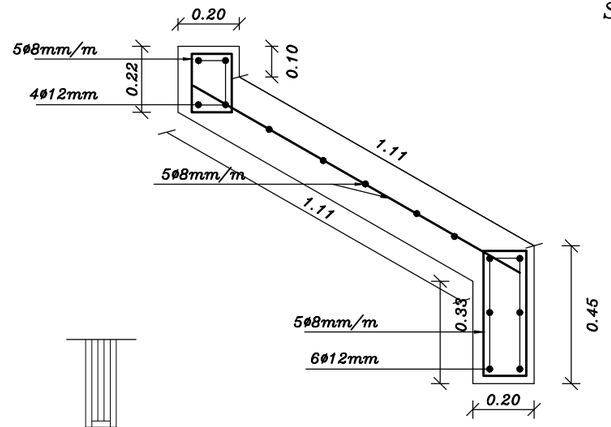

DETAIL (D2)
Scale 1:20

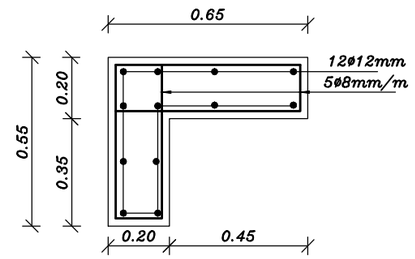

DETAIL (D1)
Scale 1:20

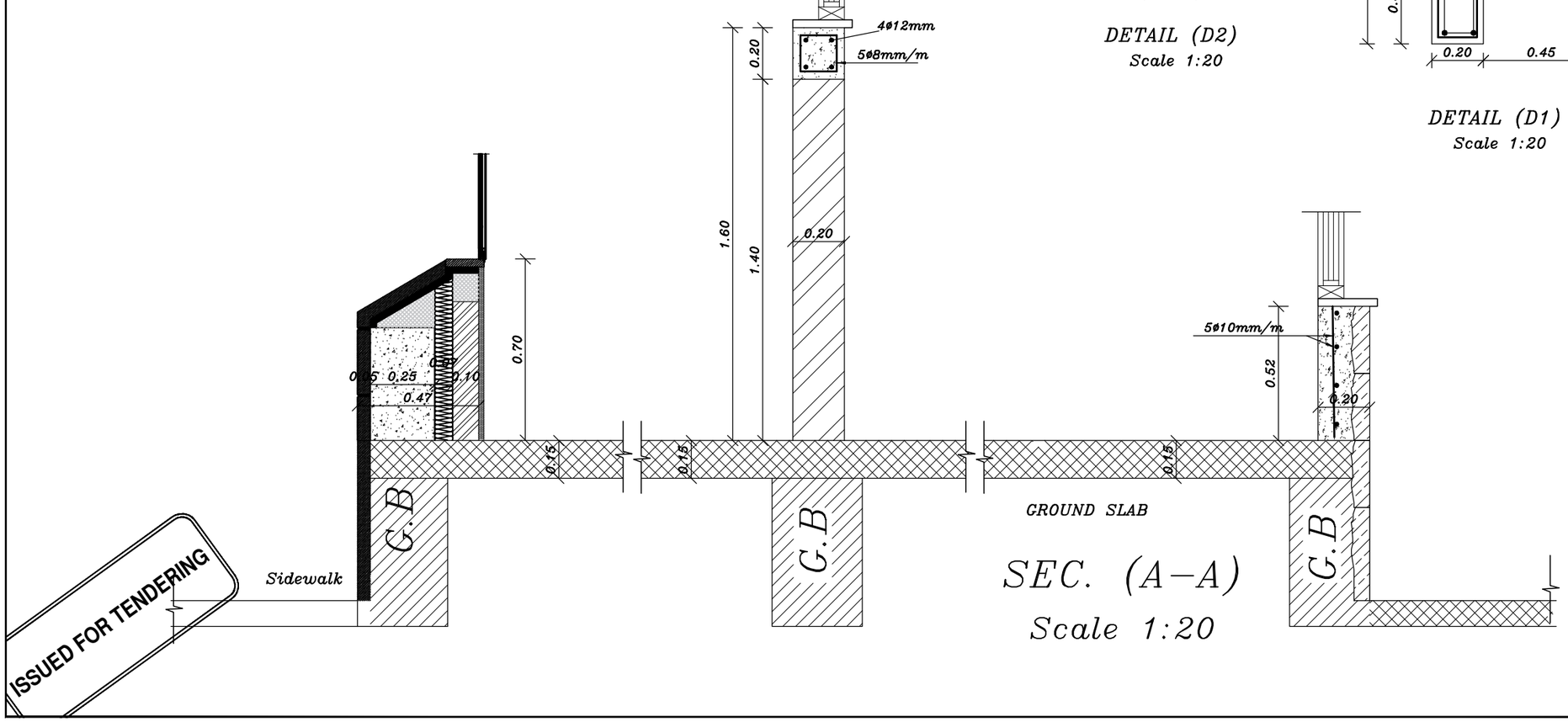

SEC. (A–A)
Scale 1:20

NOTES:–

- ALL DIMENSIONS ARE IN M.UNLESS NOTED OTHERWISE
- ALL LEVELS ARE IN M. UNLESS NOTED OTHERWISE
- DO NOT SCALE FROM DRAWINGS.

STRUCTURAL NOTES:–

1– Allowable Bearing Pressure =3.5 kg/cm2 for isolated footing & 3.0 kg/cm2 for strip footing
Foundation Depth as shown in details.
2– Foundation designed for 4 floors
3– Use concrete :–
- B 300 for columns, column neck
- B 300 for foundations, slabs, shear & retaining walls and stairs.
- B 300 for slabs on grade.
- B 300 for balding stone walls and fence walls.
- B200 for blinding.

4– Concrete cover as follows:–
- 50mm for footings.
- 50mm for columns & ground beams below grade.
- 25mm for walls, columns, beams, and slabs.

5– All structural steel used is high tensile deformed bars of Fy = 4200 kg/cm2.

6– All concrete, structural steel, blocks must tested and approved by consultant.

7– All concrete members and works below finished gr. level must be insulated with two coats of bitumen.

LEGEND

SECTION NUMBER
REFERENCE SHEET NUMBER

DETAIL NUMBER
REFERENCE SHEET NUMBER

FLOOR FINISH LEVEL
FLOOR CONCRETE LEVEL.

LEVEL SIGN IN PLAN

WINDOW NUMBER
REFERENCE SHEET NUMBER

DOOR NUMBER
REFERENCE SHEET NUMBER

RC CONCRETE FOR COL.
RC CONCRETE FOR WALLS
CONCRETE
STONE WALL
HOLLOW BLOCKS
INSOLATION MATERIAL

REVISIONS

No.	DESCRIPTION	DATE

OWNER: STATE OF PALESTINE
MINISTRY OF EDUCATION
D.G. BUILDINGS

PROJECT NO: 2501/2025

CONTRACTING AUTHORITY: Enabel
ENABEL
Belgian Development Agency

FUNDED BY: Belgium
partner in development

PROJECT NAME:
Public works contract for the 'Construction of Al-Bakri Green Girls' School In Hebron
Navision Code: PSE22001-10075

SHEET NAME:
PROTOTYPE STRUCTURAL DETAILS FOR CLASS ROOM (1)

LOCATION:
City: HEBRON GOVERNATE: HEBRON
BLOCK: 34425 PLOT NO:232 QUARTER/ LOCATION: AL-SHAABA

JOINT VENTURE
iproplan® Planungsgesellschaft mbH Consulting Engineers and Architects
Consulting Engineers
Jerusalem-Ramallah St. 90
Al. BIREIH / PALESTINE
TEL: 02-2950500 / 2950140 FAX: 02-2950157
E-mail: medad@medad-consulting.com P.O.BOX 3550

DESIGNED	Mohammad al bada		SCALE	
CHECKED	Maysa abdelfattah		DATE	AUGUST 2025
APPROVED	Khaled Muhanna		DRG. No.	S–09
DRAWN	AUTO CAD			

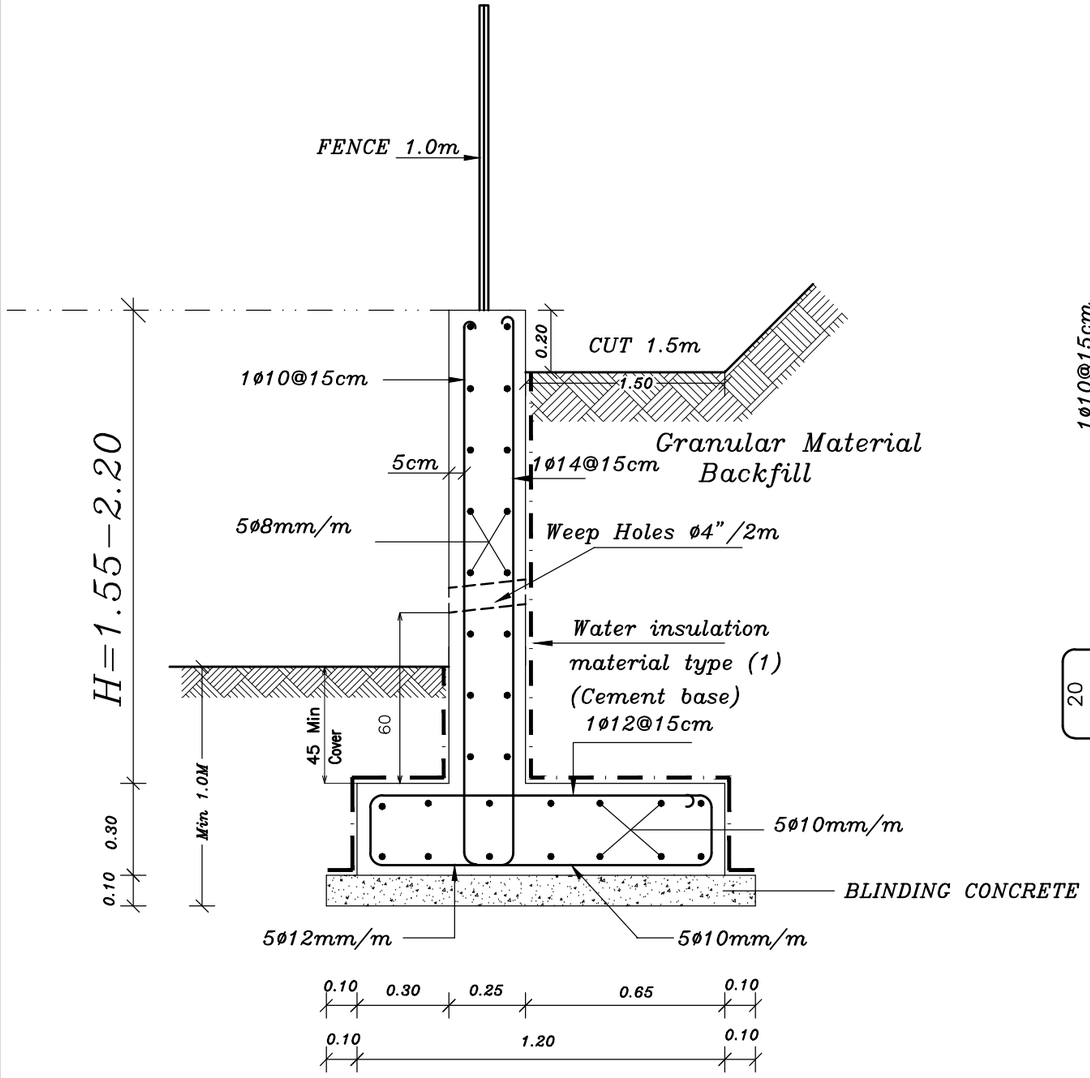

SEC. 1-1 IN RETAINING-WALL
(H=1.55-2.20)

Scale 1:20

- Expantion Joint used every 8-12 m length and every change of direction .
- Weep Holes used P.V.C ø4" every 2 m in ver. & horiz. direction .
- Backfilling soil friction (ø) must be equal or greater than 30°.

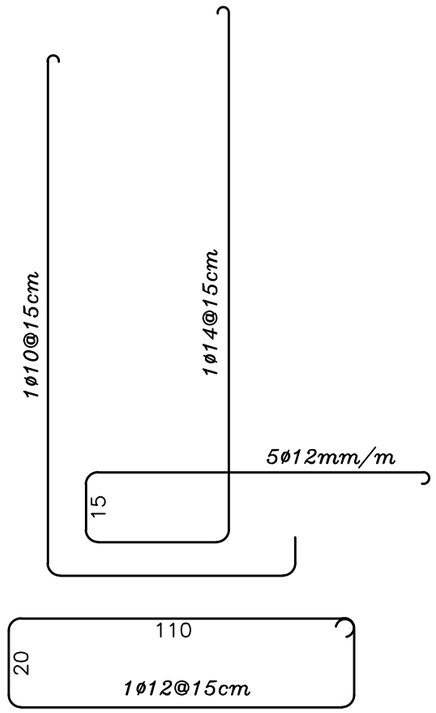

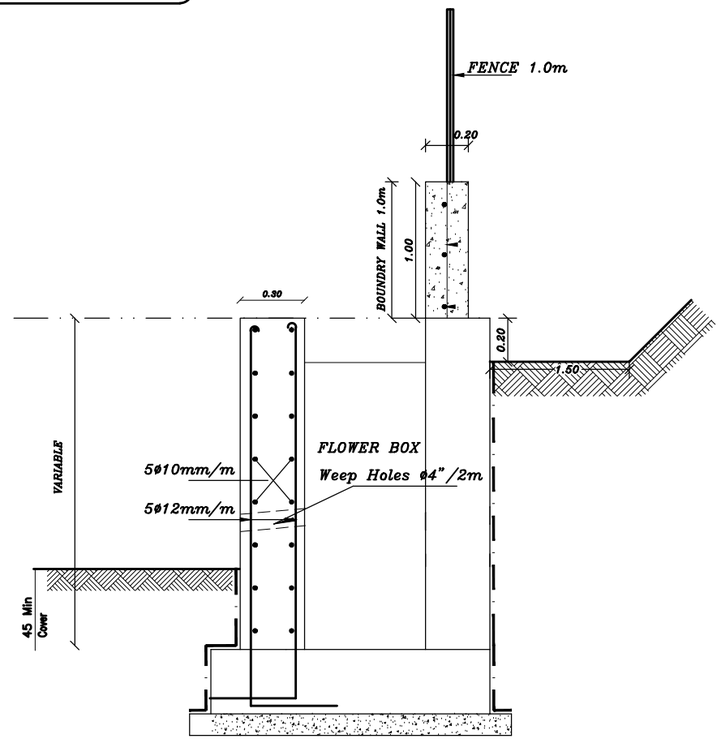

PLANTED WALL AS MENTIONED IN THE SITE PLAN
(PW -PW)

Scale 1:20

ISSUED FOR TENDERING

NOTES:-

- ALL DIMENSIONS ARE IN M.UNLESS NOTED OTHERWISE
- ALL LEVELS ARE IN M. UNLESS NOTED OTHERWISE
- DO NOT SCALE FROM DRAWINGS.

STRUCTURAL NOTES:-

1- Allowable Bearing Pressure =3.5 kg/cm2 for isolated footing & 3.0 kg/cm2 for strip footing
Foundation Depth as shown in details.
2- Foundation designed for 4 floors
3- Use concrete :-
- B 300 for columns, column neck
- B 300 for foundations, slabs, shear & retaining walls and stairs.
- B 300 for slabs on grade.
- B 300 for balding stone walls and fence walls.
- B200 for blinding.
4- Concrete cover as follows:-
- 50mm for footings.
- 50mm for columns & ground beams below grade.
- 25mm for walls, columns, beams, and slabs.
5- All structural steel used is high tensile deformed bars of Fy = 4200 kg/cm2.
6- All concrete, structural steel, blocks must tested and approved by consultant.
7- All concrete members and works below finished gr. level must be insulated with two coats of bitumen.

LEGEND

SECTION NUMBER / REFERENCE SHEET NUMBER
DETAIL NUMBER / REFERENCE SHEET NUMBER
FLOOR FINISH LEVEL / FLOOR CONCRETE LEVEL
LEVEL SIGN IN PLAN
WINDOW NUMBER / REFERENCE SHEET NUMBER
DOOR NUMBER / REFERENCE SHEET NUMBER
RC CONCRETE FOR COL.
RC CONCRETE FOR WALLS
CONCRETE
STONE WALL
HOLLOW BLOCKS
INSOLATION MATERIAL

REVISIONS

No.	DESCRIPTION	DATE

OWNER: STATE OF PALESTINE
MINISTRY OF EDUCATION
D.G. BUILDINGS

PROJECT NO: 2501/2025

CONTRACTING AUTHORITY: Enabel
ENABEL
Belgian Development Agency

FUNDED BY: Belgium
partner in development

PROJECT NAME:
Public works contract for the 'Construction of Al-Bakri Green Girls' School In Hebron
Navision Code: PSE22001-10075

SHEET NAME:
PROTOTYPE STRUCTURAL DETAILS FOR RETAINING WALL (1)

LOCATION:
City: HEBRON — GOVERNATE: HEBRON
BLOCK: 34425 — PLOT NO:232 — QUARTER/ LOCATION: AL-SHAABA

JOINT VENTURE
iproplan Planungsgesellschaft mbH Consulting Engineers And Architects
Modar Consulting Engineers
REGISTRATION NO. 22
AL-BIREH - PALESTINE
TEL 02-2406302 - 2405145 FAX 02-2404157
E-mail: modar@modar-consulting.com P.O.BOX 3030

DESIGNED	Mohammad al bada		SCALE	
CHECKED	Maysa abdelfattah		DATE	AUGUST 2025
APPROVED	Khaled Muhanna		DRG. No.	SD-10
DRAWN	AUTO CAD			

- Expantion Joint used every 8–12 m length and every change of direction .
- Weep Holes used P.V.C ø4" every 2 m in ver. & horiz. direction .
- Backfilling soil friction (ø) must be equal or greater than 30°.

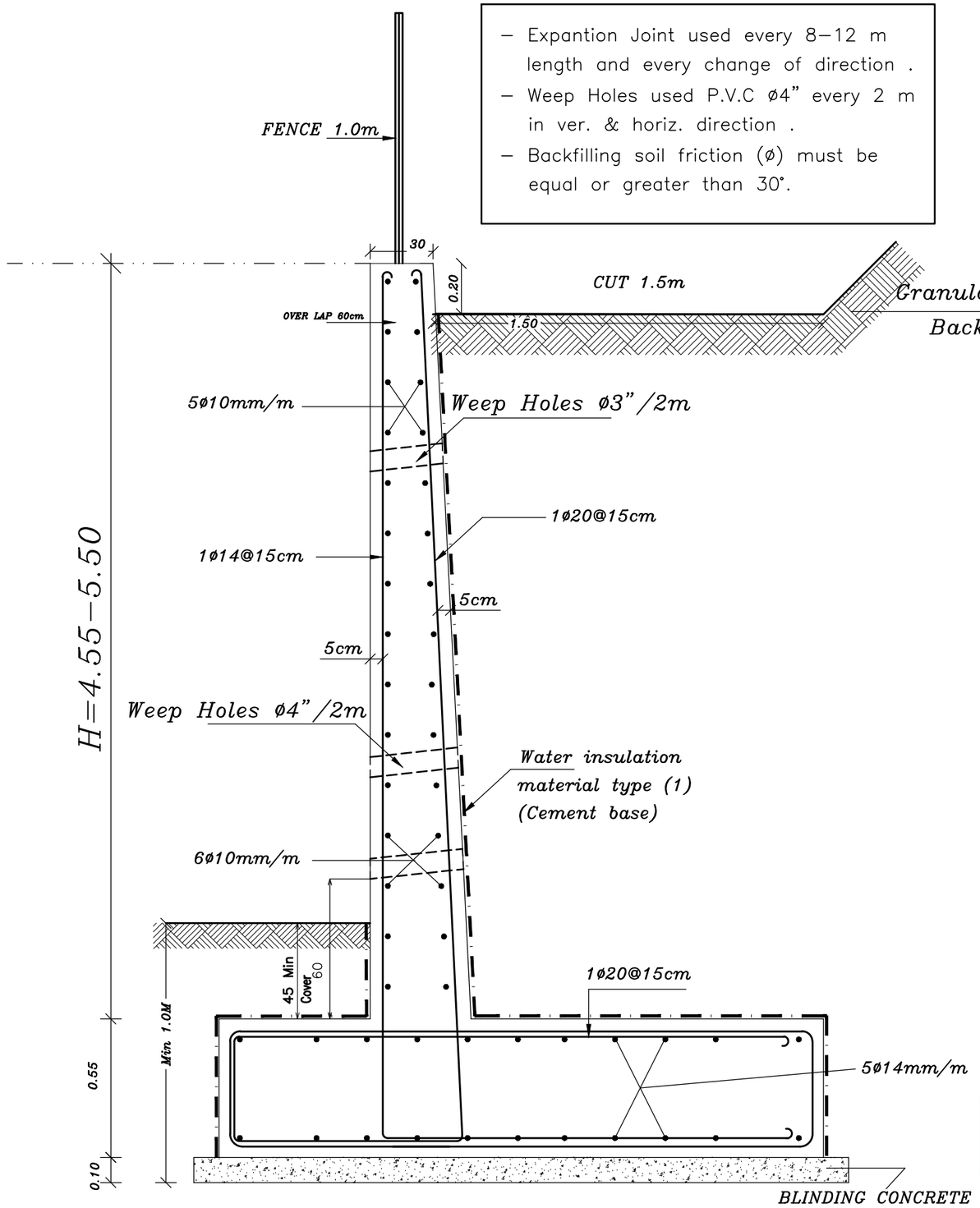

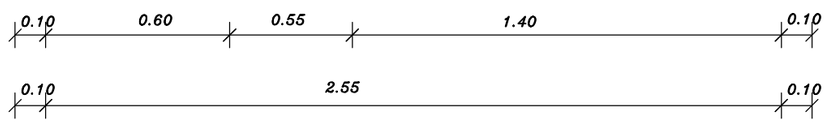

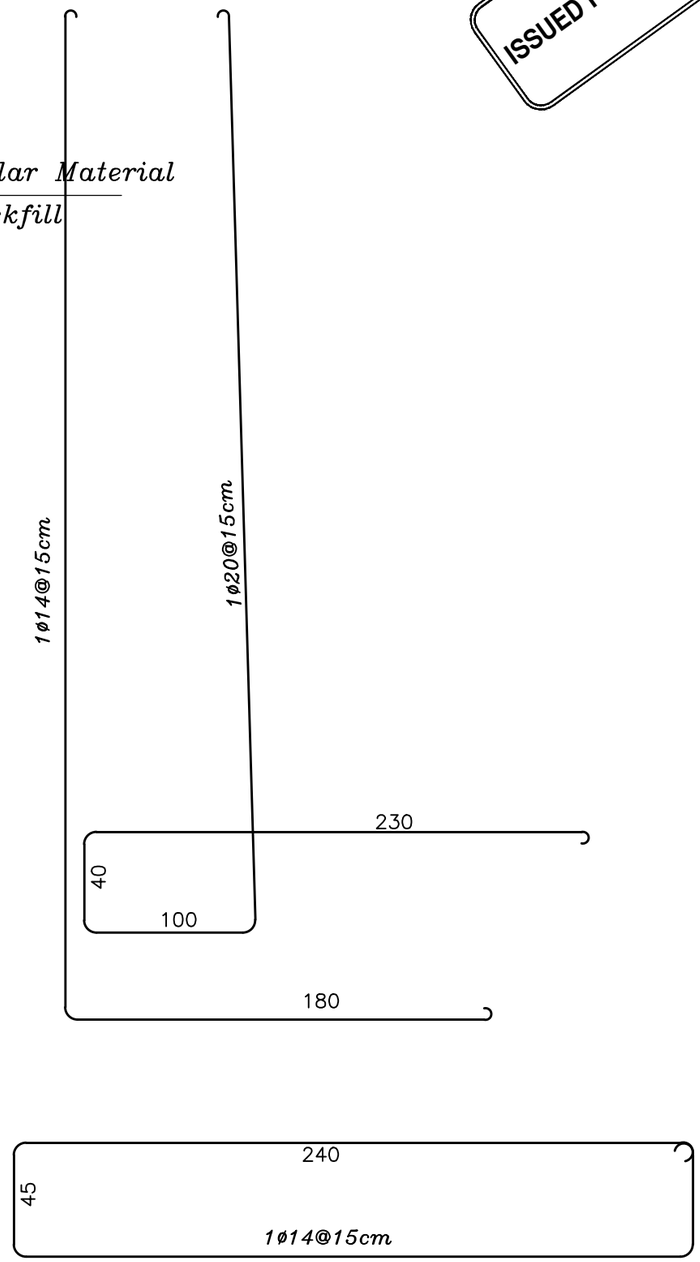

SEC. 2–2 IN RETAINING–WALL
(H=4.55–5.50)
Scale 1:20

ISSUED FOR TENDERING

NOTES:–

- ALL DIMENSIONS ARE IN M.UNLESS NOTED OTHERWISE
- ALL LEVELS ARE IN M. UNLESS NOTED OTHERWISE
- DO NOT SCALE FROM DRAWINGS.

STRUCTURAL NOTES:–

1– Allowable Bearing Pressure =3.5 kg/cm2 for isolated footing & 3.0 kg/cm2 for strip footing
Foundation Depth as shown in details.
2– Foundation designed for 4 floors
3– Use concrete :–
- B 300 for columns, column neck
- B 300 for foundations, slabs, shear & retaining walls and stairs.
- B 300 for slabs on grade.
- B 300 for baking stone walls and fence walls.
- B200 for blinding.

4– Concrete cover as follows:–
- 50mm for footings.
- 50mm for columns & ground beams below grade.
- 25mm for walls, columns, beams, and slabs.

5– All structural steel used is high tensile deformed bars of Fy = 4200 kg/cm2.

6– All concrete, structural steel, blocks must tested and approved by consultant.

7– All concrete members and works below finished gr. level must be insulated with two coats of bitumen.

LEGEND

SECTION NUMBER
REFERENCE SHEET NUMBER

DETAIL NUMBER
REFERENCE SHEET NUMBER

FLOOR FINISH LEVEL
FLOOR CONCRETE LEVEL.

LEVEL SIGN IN PLAN

WINDOW NUMBER
REFERENCE SHEET NUMBER

DOOR NUMBER
REFERENCE SHEET NUMBER

RC CONCRETE FOR COL.
RC CONCRETE FOR WALLS
CONCRETE
STONE WALL
HOLLOW BLOCKS
INSOLATION MATERIAL

REVISIONS

No.	DESCRIPTION	DATE

OWNER: STATE OF PALESTINE
MINISTRY OF EDUCATION
D.G. BUILDINGS

PROJECT NO: 2501/2025

CONTRACTING AUTHORITY:
Enabel
ENABEL
Belgian Development Agency

FUNDED BY:
Belgium
partner in development

PROJECT NAME:
Public works contract for the 'Construction of Al-Bakri Green Girls' School In Hebron
Navision Code: PSE22001-10075

SHEET NAME:
PROTOTYPE STRUCTURAL DETAILS FOR RETAINING WALL (2)

LOCATION:
City: HEBRON GOVERNATE: HEBRON
BLOCK: 34425 PLOT NO:232 QUARTER/ LOCATION: AL-SHAABA

JOINT VENTURE
iproplan® Planungsgesellschaft mbH Consulting Engineers and Architects
Consulting Engineers
REGISTRATION No. 02
AL-BIREH - PALESTINE
TEL: 02-2406502 / 2406145 FAX 02-2406157
E-mail: maisa@maisa-consulting.com P.O.BOX 3050

DESIGNED	Mohammad al bada		SCALE	
CHECKED	Maysa abdelfattah		DATE	AUGUST 2025
APPROVED	Khaled Muhanna		DRG. No.	SD–11
DRAWN	AUTO CAD			

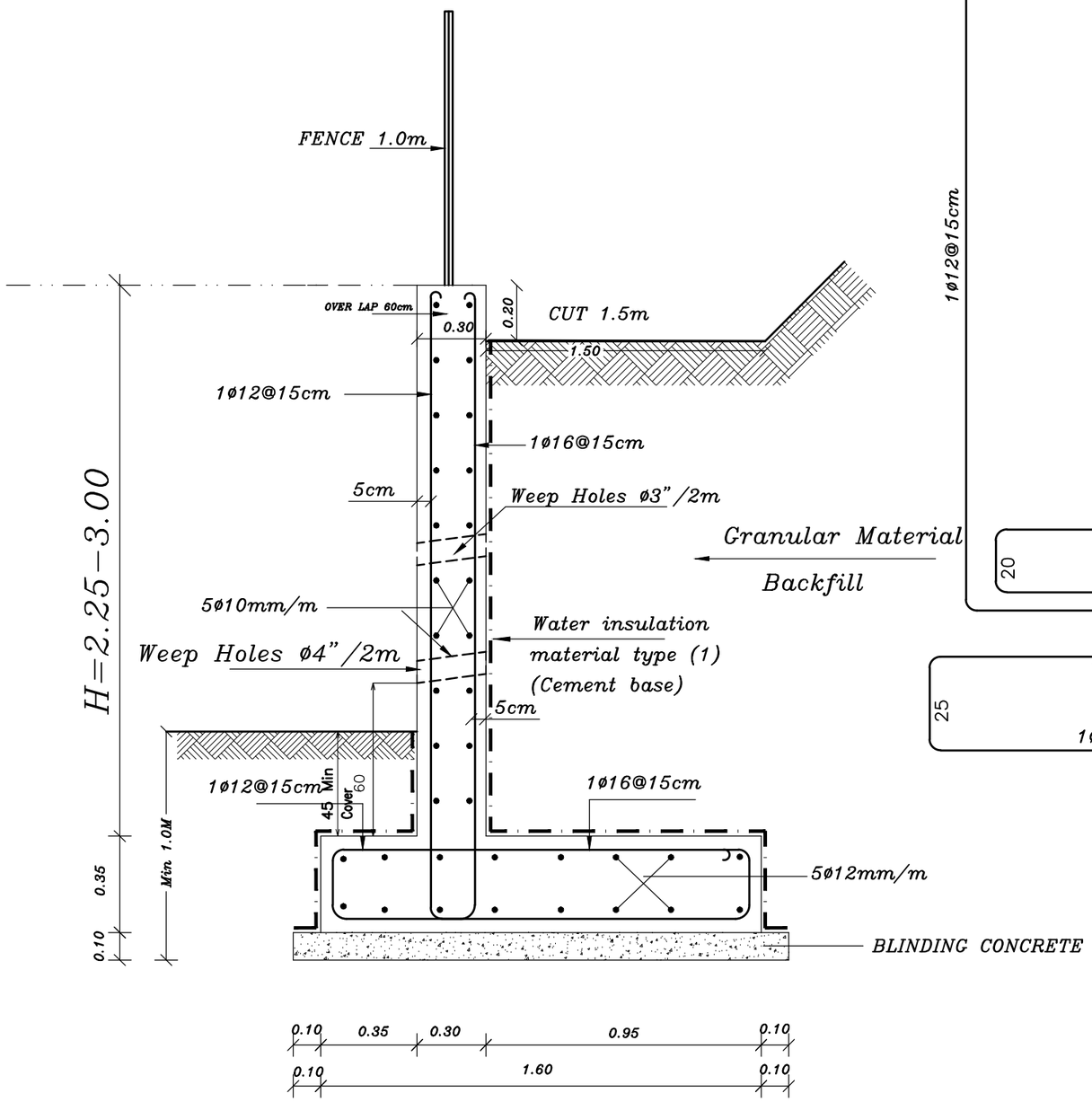

SEC. 3-3 IN RETAINING-WALL
(H=2.25-3.00)
Scale 1:20

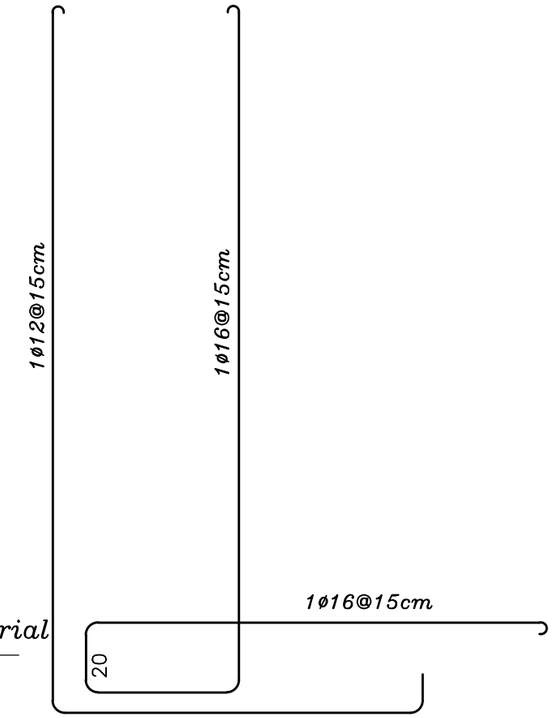

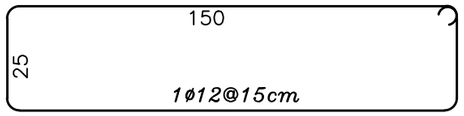

- Expantion Joint used every 8-12 m length and every change of direction .
- Weep Holes used P.V.C ø4" every 2 m in ver. & horiz. direction .
- Backfilling soil friction (ø) must be equal or greater than 30°.

ISSUED FOR TENDERING

NOTES:-

- ALL DIMENSIONS ARE IN M.UNLESS NOTED OTHERWISE
- ALL LEVELS ARE IN M. UNLESS NOTED OTHERWISE
- DO NOT SCALE FROM DRAWINGS.

STRUCTURAL NOTES:-

1- Allowable Bearing Pressure =3.5 kg/cm2 for isolated footing & 3.0 kg/cm2 for strip footing
Foundation Depth as shown in details.
2- Foundation designed for 4 floors
3- Use concrete :-
- B 300 for columns, column neck
- B 300 for foundations, slabs, shear & retaining walls and stairs.
- B 300 for slabs on grade.
- B 300 for balding stone walls and fence walls.
- B200 for blinding.
4- Concrete cover as follows:-
- 50mm for footings.
- 50mm for columns & ground beams below grade.
- 25mm for walls, columns, beams, and slabs.
5- All structural steel used is high tensile deformed bars of Fy = 4200 kg/cm2.
6- All concrete, structural steel, blocks must tested and approved by consultant.
7- All concrete members and works below finished gr. level must be insulated with two coats of bitumen.

LEGEND

SECTION NUMBER
REFERENCE SHEET NUMBER
DETAIL NUMBER
REFERENCE SHEET NUMBER
FLOOR FINISH LEVEL
FLOOR CONCRETE LEVEL.
LEVEL SIGN IN PLAN
WINDOW NUMBER
REFERENCE SHEET NUMBER
DOOR NUMBER
REFERENCE SHEET NUMBER
RC CONCRETE FOR COL.
RC CONCRETE FOR WALLS
CONCRETE
STONE WALL
HOLLOW BLOCKS
INSOLATION MATERIAL

REVISIONS

No.	DESCRIPTION	DATE

OWNER: STATE OF PALESTINE
MINISTRY OF EDUCATION
D.G. BUILDINGS

PROJECT NO: 2501/2025

CONTRACTING AUTHORITY:
Enabel
ENABEL
Belgian Development Agency

FUNDED BY:
Belgium
partner in development

PROJECT NAME:
Public works contract for the 'Construction of Al-Bakri Green Girls' School In Hebron
Navision Code: PSE22001-10075

SHEET NAME:
PROTOTYPE STRUCTURAL DETAILS FOR RETAINING WALL (3)

LOCATION:
City: HEBRON GOVERNATE: HEBRON
BLOCK: 34425 PLOT NO:232 QUARTER/ LOCATION: AL-SHAABA

JOINT VENTURE
iproplan® Planungsgesellschaft mbH Consulting Engineers And Architects
Modern Consulting Engineers
HEADQUARTERS NO. 32
AL BIREH - PALESTINE
TEL 02-2950959 / 2950140 FAX 02-2406157
E-mail: medar@medar-consulting.com P.O.BOX 3030

DESIGNED	Mohammad al bada		SCALE	
CHECKED	Maysa abdelfattah		DATE	AUGUST 2025
APPROVED	Khaled Muhanna		DRG. No.	SD-12
DRAWN	AUTO CAD			

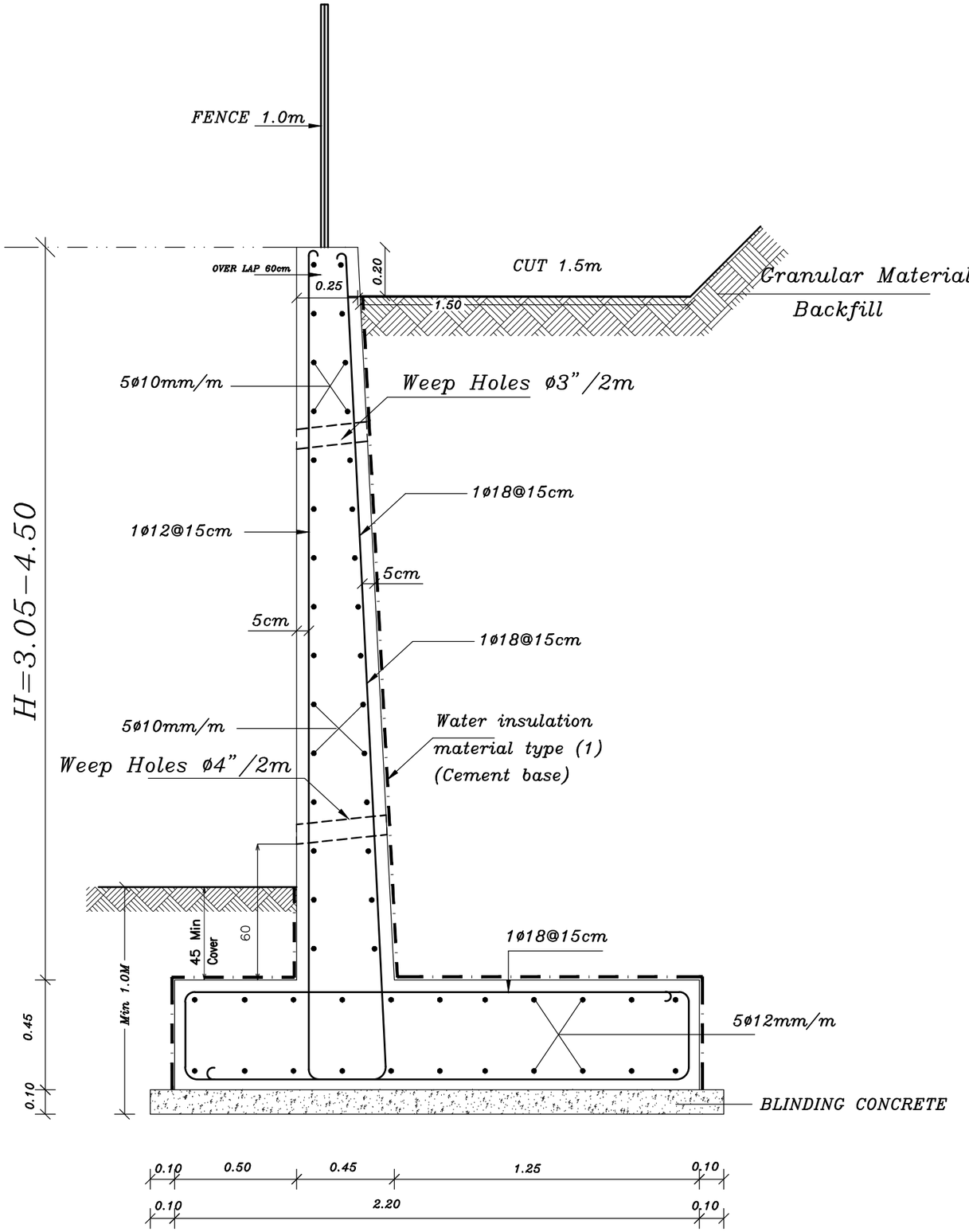

SEC. 4-4 IN RETAINING-WALL
(H=3.05-4.50)
Scale 1:20

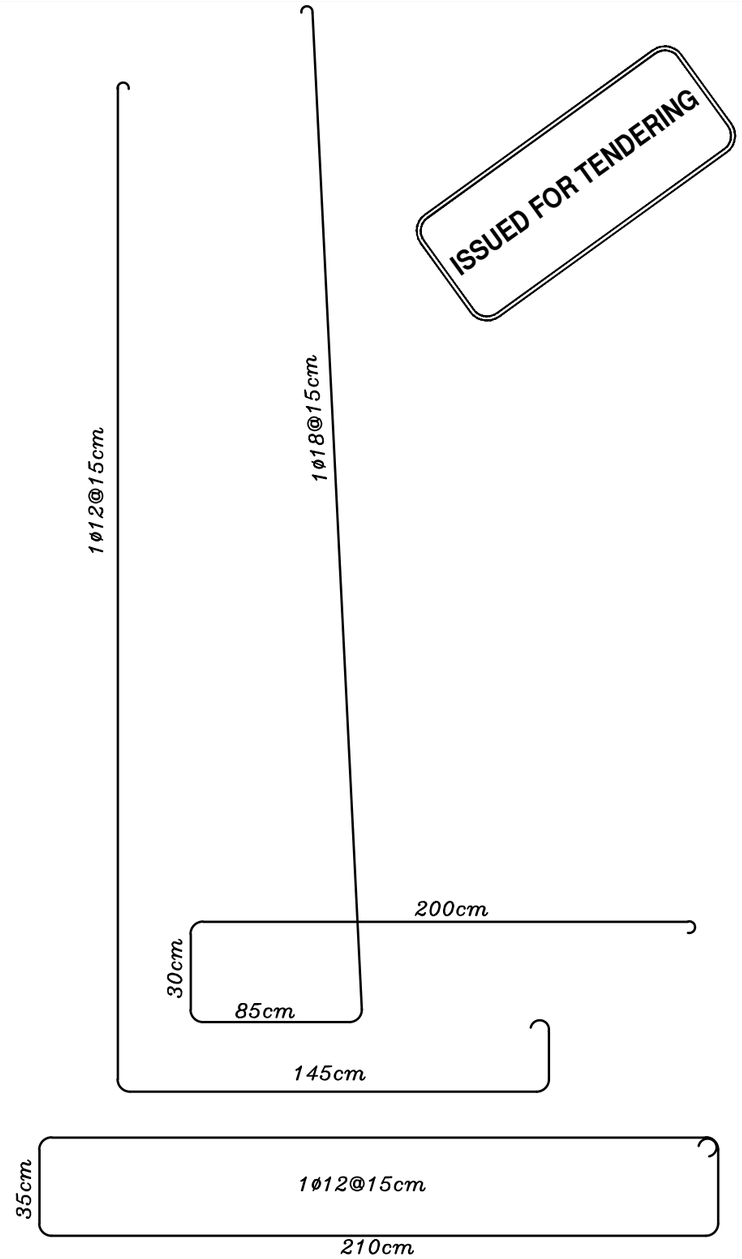

ISSUED FOR TENDERING

- Expantion Joint used every 8-12 m length and every change of direction .
- Weep Holes used P.V.C ø4" every 2 m in ver. & horiz. direction .
- Backfilling soil friction (ø) must be equal or greater than 30°.

NOTES:-

- ALL DIMENSIONS ARE IN M.UNLESS NOTED OTHERWISE
- ALL LEVELS ARE IN M. UNLESS NOTED OTHERWISE
- DO NOT SCALE FROM DRAWINGS.

STRUCTURAL NOTES:-

1- Allowable Bearing Pressure =3.5 kg/cm2 for isolated footing & 3.0 kg/cm2 for strip footing
Foundation Depth as shown in details.
2- Foundation designed for 4 floors
3- Use concrete :-
- B 300 for columns, column neck
- B 300 for foundations, slabs, shear & retaining walls and stairs.
- B 300 for slabs on grade.
- B 300 for baking stone walls and fence walls.
- B200 for blinding.
4- Concrete cover as follows:-
- 50mm for footings.
- 50mm for columns & ground beams below grade.
- 25mm for walls, columns, beams, and slabs.
5- All structural steel used is high tensile deformed bars of Fy = 4200 kg/cm2.
6- All concrete, structural steel, blocks must tested and approved by consultant.
7- All concrete members and works below finished gr. level must be insulated with two coats of bitumen.

LEGEND

SECTION NUMBER
REFERENCE SHEET NUMBER
DETAIL NUMBER
REFERENCE SHEET NUMBER
FLOOR FINISH LEVEL
FLOOR CONCRETE LEVEL
LEVEL SIGN IN PLAN
WINDOW NUMBER
REFERENCE SHEET NUMBER
DOOR NUMBER
REFERENCE SHEET NUMBER
RC CONCRETE FOR COL.
RC CONCRETE FOR WALLS
CONCRETE
STONE WALL
HOLLOW BLOCKS
INSOLATION MATERIAL

REVISIONS

No.	DESCRIPTION	DATE

OWNER: STATE OF PALESTINE
MINISTRY OF EDUCATION
D.G. BUILDINGS

PROJECT NO: 2501/2025

CONTRACTING AUTHORITY:
Enabel
ENABEL
Belgian Development Agency

FUNDED BY:
Belgium
partner in development

PROJECT NAME:
Public works contract for the 'Construction of Al-Bakri Green Girls' School In Hebron
Navision Code: PSE22001-10075

SHEET NAME:
PROTOTYPE STRUCTURAL DETAILS FOR RETAINING WALL (4)

LOCATION:
City: HEBRON
BLOCK: 34425 PLOT NO:232
GOVERNATE: HEBRON
QUARTER/ LOCATION: AL-SHAABA

JOINT VENTURE
iproplan Planungsgesellschaft mbH Consulting Engineers And Architects
Consulting Engineers

DESIGNED	Mohammad al bada		SCALE	
CHECKED	Maysa abdelfattah		DATE	AUGUST 2025
APPROVED	Khaled Muhanna		DRG. No.	SD-13
DRAWN	AUTO CAD			

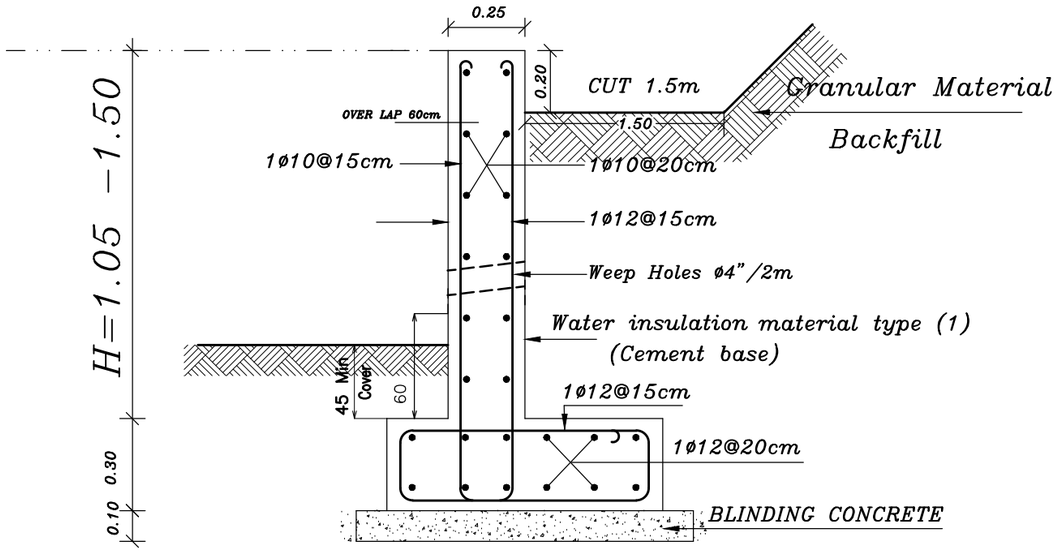

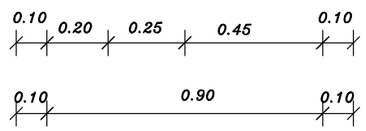

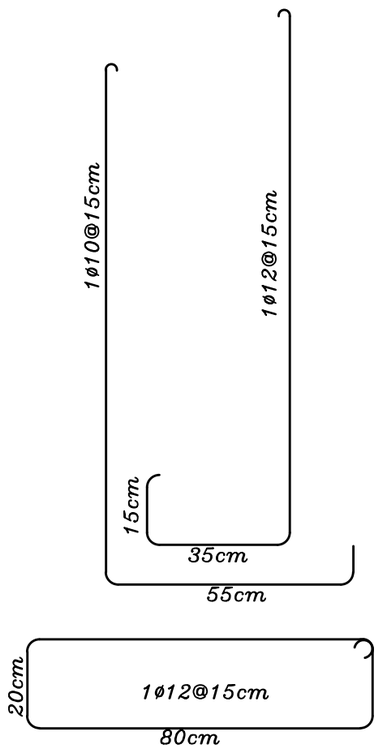

SEC. 5-5 IN RETAINING-WALL

Scale 1:20

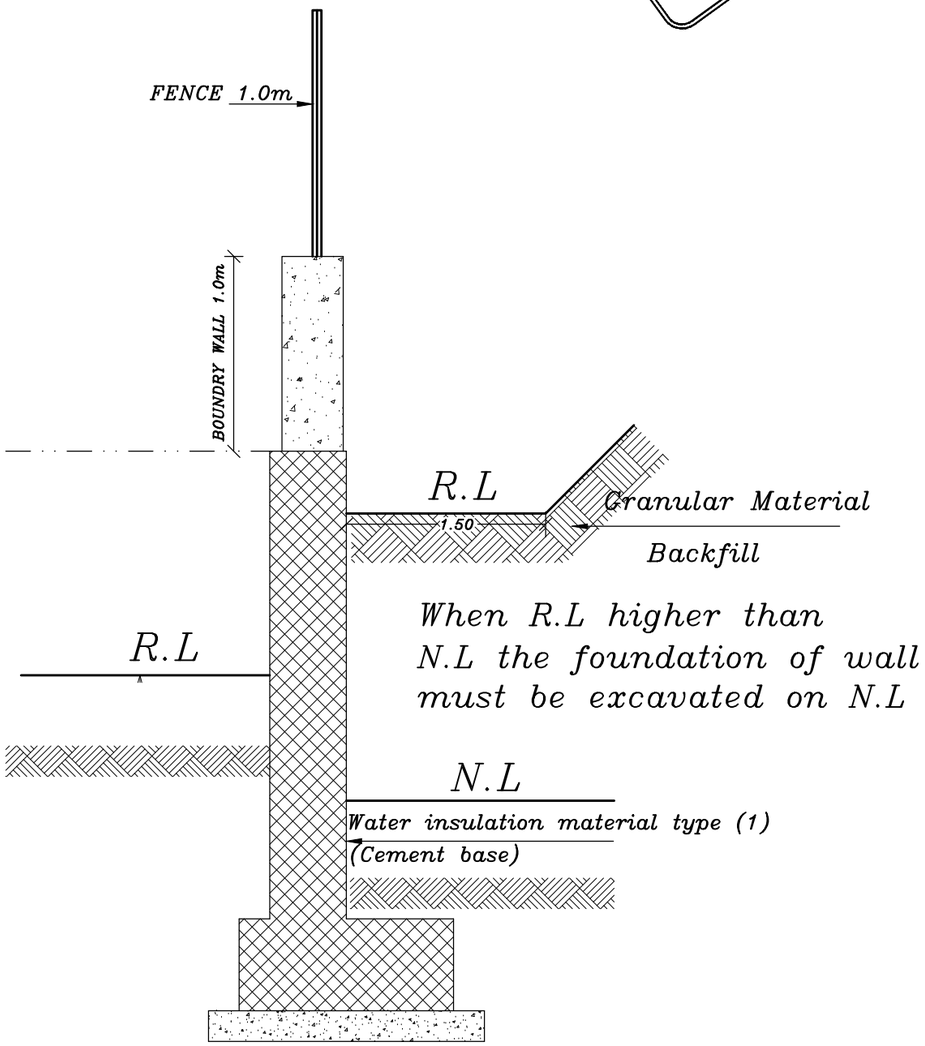

TYPICAL SEC. RETAINING-WALL

Scale 1:20

ISSUED FOR TENDERING

NOTES:-

- ALL DIMENSIONS ARE IN M.UNLESS NOTED OTHERWISE
- ALL LEVELS ARE IN M. UNLESS NOTED OTHERWISE
- DO NOT SCALE FROM DRAWINGS.

STRUCTURAL NOTES:-

1- Allowable Bearing Pressure =3.5 kg/cm2 for isolated footing & 3.0 kg/cm2 for strip footing
Foundation Depth as shown in details.
2- Foundation designed for 4 floors
3- Use concrete :-
- B 300 for columns, column neck
- B 300 for foundations, slabs, shear & retaining walls and stairs.
- B 300 for slabs on grade.
- B 300 for balding stone walls and fence walls.
- B200 for blinding.
4- Concrete cover as follows:-
- 50mm for footings.
- 50mm for columns & ground beams below grade.
- 25mm for walls, columns, beams, and slabs.
5- All structural steel used is high tensile deformed bars of Fy = 4200 kg/cm2.
6- All concrete, structural steel, blocks must tested and approved by consultant.
7- All concrete members and works below finished gr. level must be insulated with two coats of bitumen.

LEGEND

SECTION NUMBER
REFERENCE SHEET NUMBER

DETAIL NUMBER
REFERENCE SHEET NUMBER

FLOOR FINISH LEVEL
FLOOR CONCRETE LEVEL

LEVEL SIGN IN PLAN

WINDOW NUMBER
REFERENCE SHEET NUMBER

DOOR NUMBER
REFERENCE SHEET NUMBER

RC CONCRETE FOR COL.
RC CONCRETE FOR WALLS
CONCRETE
STONE WALL
HOLLOW BLOCKS
INSOLATION MATERIAL

REVISIONS

No.	DESCRIPTION	DATE

OWNER: STATE OF PALESTINE
MINISTRY OF EDUCATION
D.G. BUILDINGS

PROJECT NO: 2501/2025

CONTRACTING AUTHORITY: Enabel
ENABEL
Belgian Development Agency

FUNDED BY: Belgium
partner in development

PROJECT NAME:
Public works contract for the 'Construction of Al-Bakri Green Girls' School In Hebron
Navision Code: PSE22001-10075

SHEET NAME:
PROTOTYPE STRUCTURAL DETAILS FOR RETAINING WALL (5)

LOCATION:
City: HEBRON — GOVERNATE: HEBRON
BLOCK: 34425 — PLOT NO:232 — QUARTER/ LOCATION: AL-SHAABA

JOINT VENTURE
iproplan Planungsgesellschaft mbH Consulting Engineers And Architects
Modaqa Consulting Engineers
REGISTRATION NO. 42
AL-BIREH - PALESTINE
TEL: 02-2406202 / 2955145 FAX: 02-2404157
E-mail: modaqa@modaqa-consulting.com P.O.BOX 3059

DESIGNED	Mohammad al bada		SCALE	
CHECKED	Maysa abdelfattah		DATE	AUGUST 2025
APPROVED	Khaled Muhanna		DRG. No.	SD-14
DRAWN	AUTO CAD			

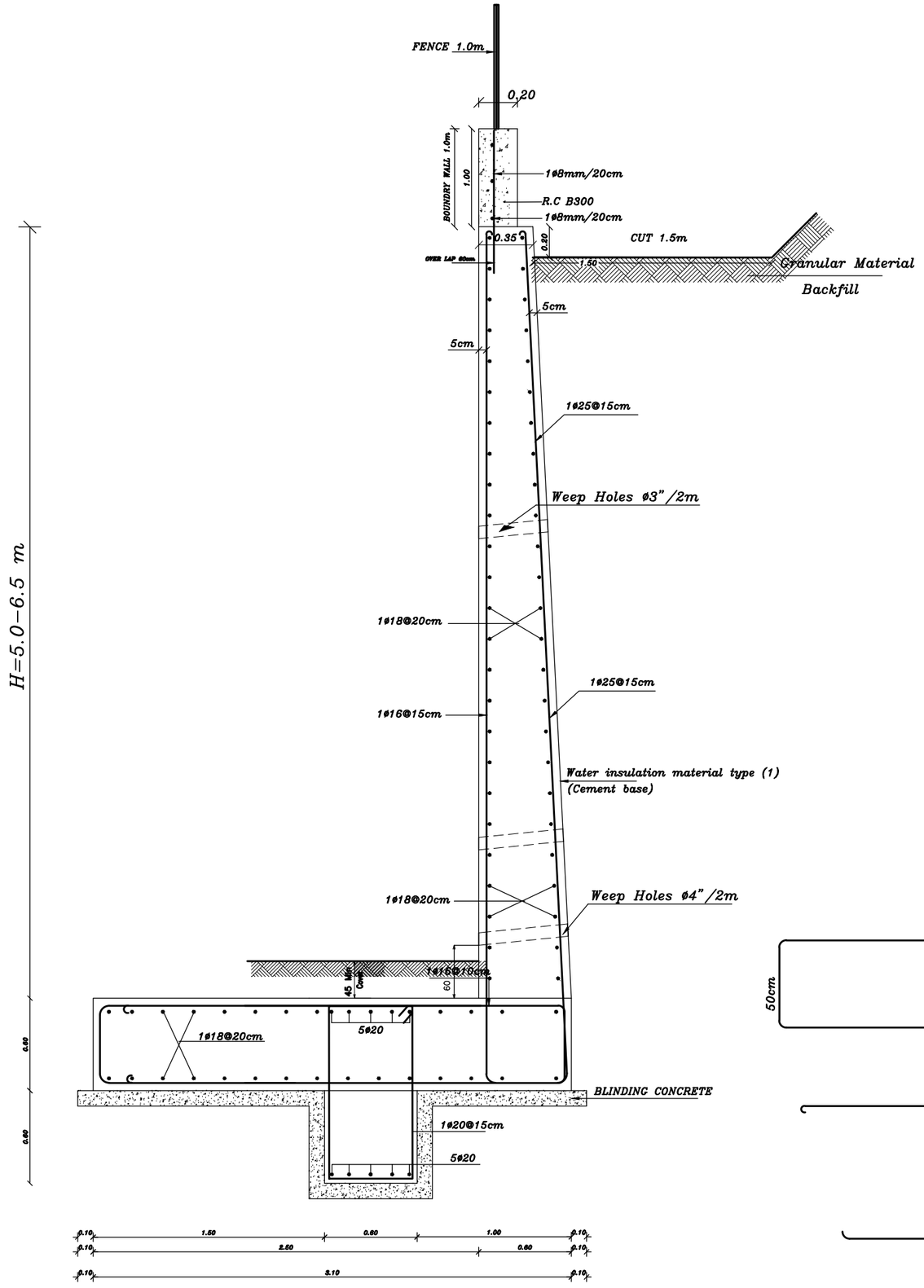

SEC. 6-6 IN RETAINING-WALL
(H=5.00-6.50)
Scale 1:20

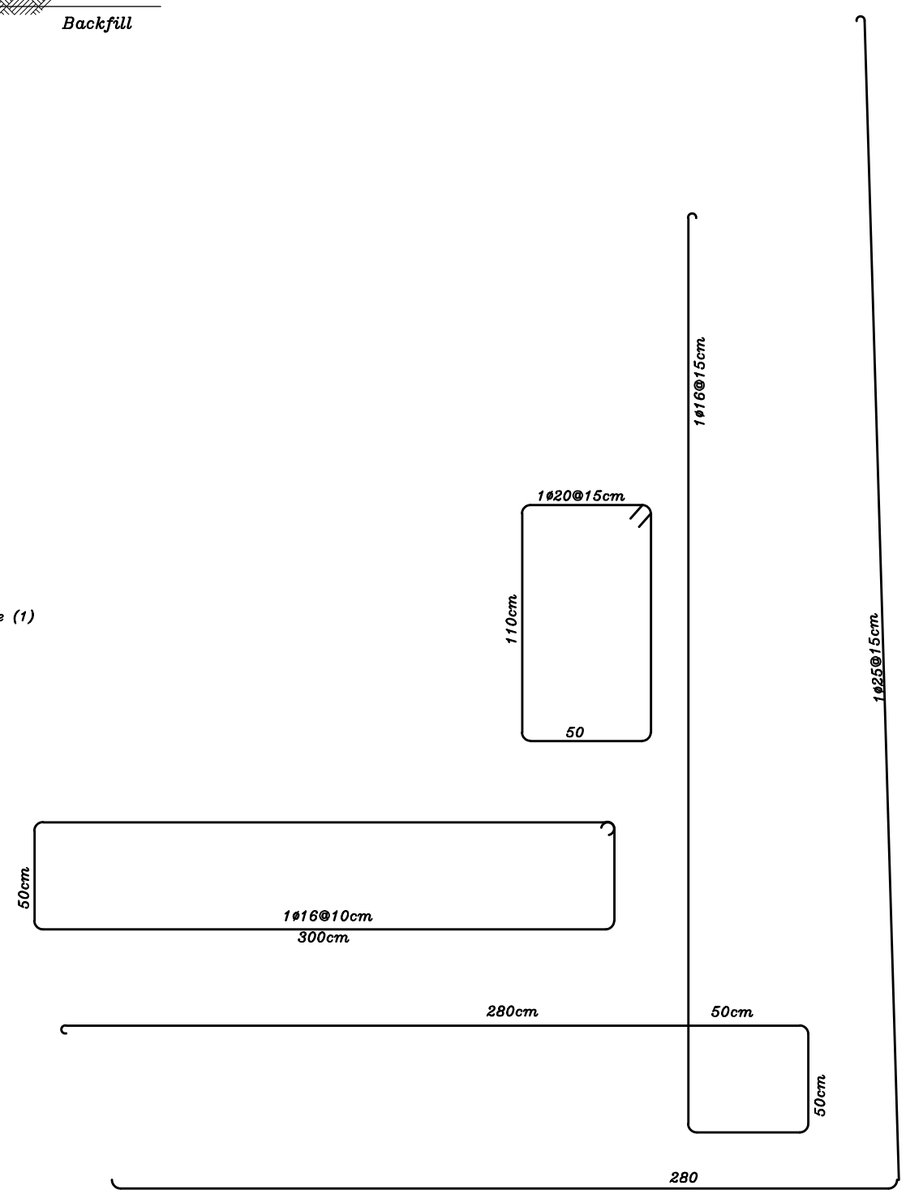

ISSUED FOR TENDERING

NOTES:-

- ALL DIMENSIONS ARE IN M.UNLESS NOTED OTHERWISE
- ALL LEVELS ARE IN M. UNLESS NOTED OTHERWISE
- DO NOT SCALE FROM DRAWINGS.

STRUCTURAL NOTES:-

1- Allowable Bearing Pressure =3.5 kg/cm2 for isolated footing & 3.0 kg/cm2 for strip footing
Foundation Depth as shown in details.
2- Foundation designed for 4 floors
3- Use concrete :-
- B 300 for columns, column neck
- B 300 for foundations, slabs, shear & retaining walls and stairs.
- B 300 for slabs on grade.
- B 300 for balding stone walls and fence walls.
- B200 for blinding.
4- Concrete cover as follows:-
- 50mm for footings.
- 50mm for columns & ground beams below grade.
- 25mm for walls, columns, beams, and slabs.
5- All structural steel used is high tensile deformed bars of Fy = 4200 kg/cm2.
6- All concrete, structural steel, blocks must tested and approved by consultant.
7- All concrete members and works below finished gr. level must be insulated with two coats of bitumen.

LEGEND

SECTION NUMBER
REFERENCE SHEET NUMBER

DETAIL NUMBER
REFERENCE SHEET NUMBER

FLOOR FINISH LEVEL
FLOOR CONCRETE LEVEL.

LEVEL SIGN IN PLAN

WINDOW NUMBER
REFERENCE SHEET NUMBER

DOOR NUMBER
REFERENCE SHEET NUMBER

RC CONCRETE FOR COL.
RC CONCRETE FOR WALLS
CONCRETE
STONE WALL
HOLLOW BLOCKS
INSOLATION MATERIAL

REVISIONS

No.	DESCRIPTION	DATE

OWNER: STATE OF PALESTINE
MINISTRY OF EDUCATION
D.G. BUILDINGS

PROJECT NO: 2501/2025

CONTRACTING AUTHORITY:
Enabel
ENABEL
Belgian Development Agency

FUNDED BY:
Belgium
partner in development

PROJECT NAME:
Public works contract for the 'Construction of Al-Bakri Green Girls' School in Hebron
Navision Code: PSE22001-10075

SHEET NAME:
PROTOTYPE STRUCTURAL DETAILS FOR RETAINING WALL (6)

LOCATION:
City: HEBRON — GOVERNATE: HEBRON
BLOCK: 34425 — PLOT NO:232 — QUARTER/ LOCATION: AL-SHAABA

JOINT VENTURE
iproplan Planungsgesellschaft mbH Consulting Engineers And Architects
Modar Consulting Engineers
REGISTRATION NO. 42
AL-BIREH - PALESTINE
TEL:02-2406202 - 2955145 FAX:02-2404157
E-mail: modar@modar-consulting.com P.O.BOX 3059

DESIGNED	Mohammad al bada	SCALE	
CHECKED	Maysa abdelfattah	DATE	AUGUST 2025
APPROVED	Khaled Muhanna	DRG. No.	SD-15
DRAWN	AUTO CAD		

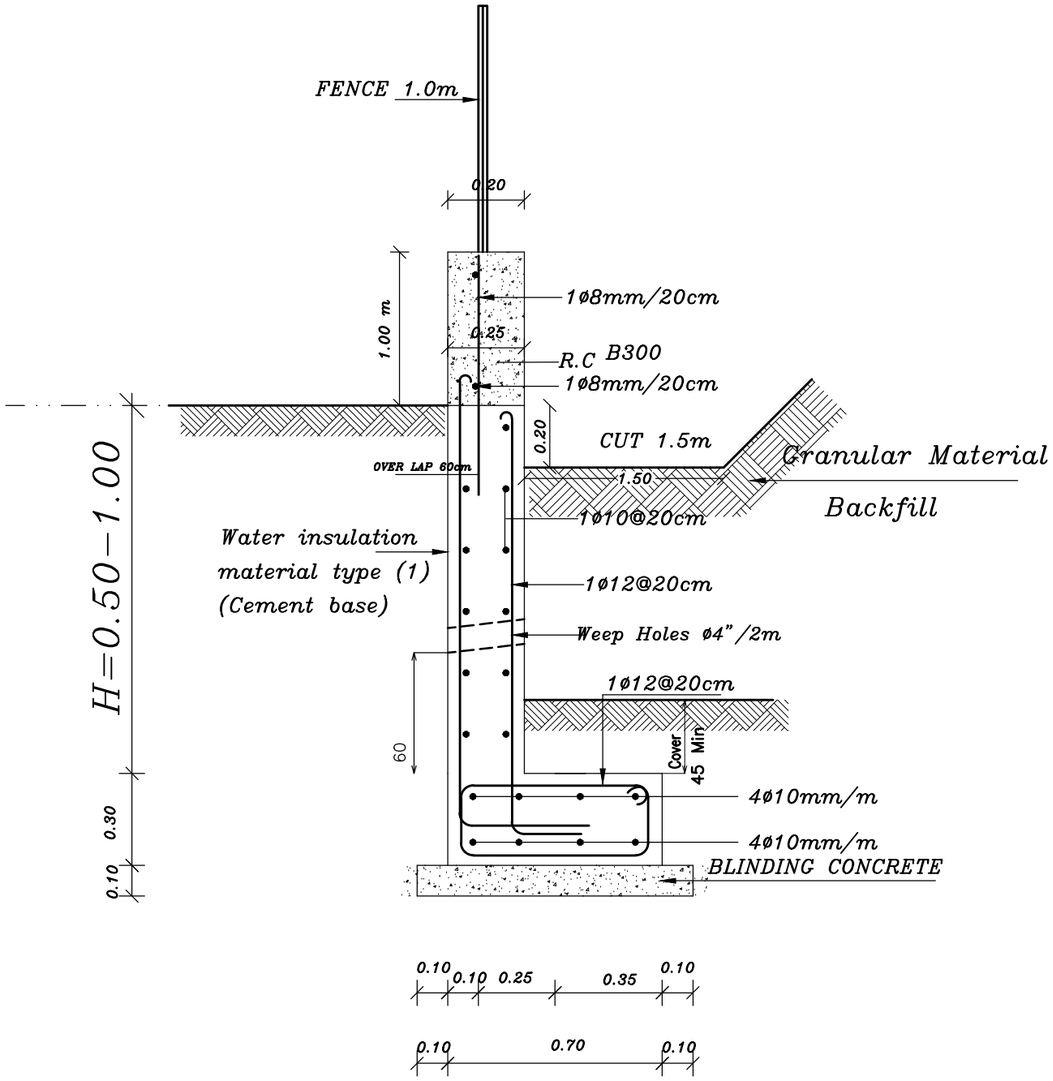

SEC. 7-7 IN RETAINING-WALL

Scale 1:20

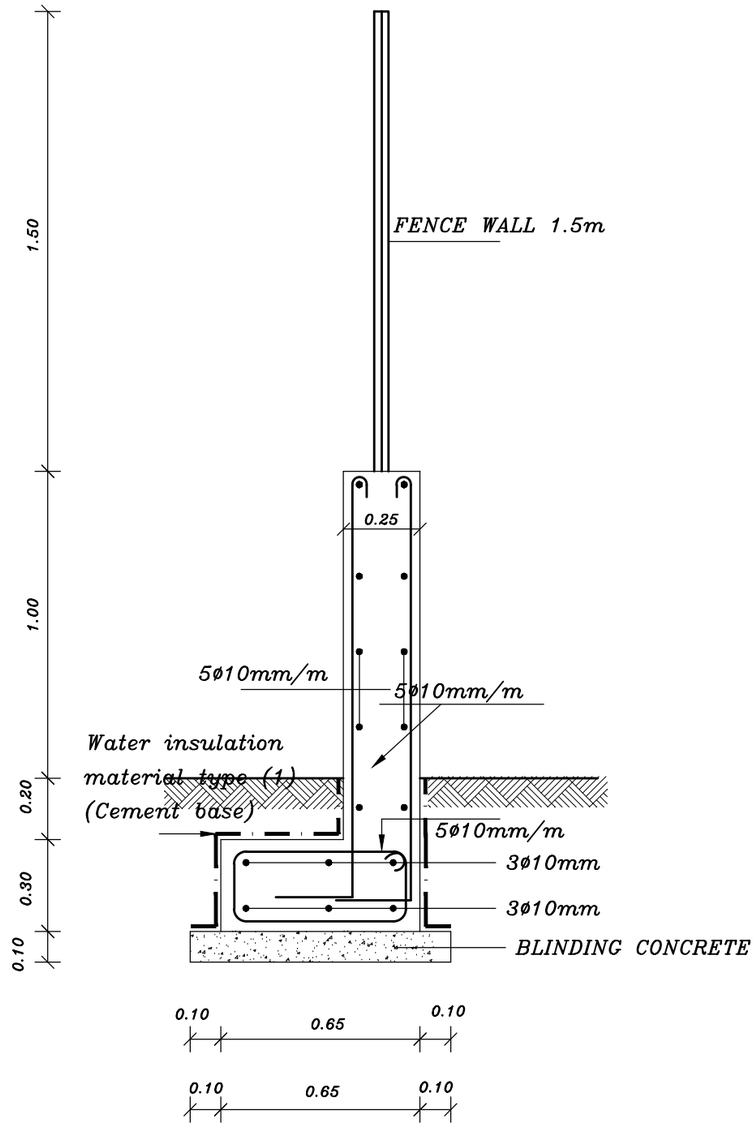

SECTION 8-8 BOUNDARY /FENCE WALL

Scale 1:20

ISSUED FOR TENDERING

NOTES:-

- ALL DIMENSIONS ARE IN M.UNLESS NOTED OTHERWISE
- ALL LEVELS ARE IN M. UNLESS NOTED OTHERWISE
- DO NOT SCALE FROM DRAWINGS.

STRUCTURAL NOTES:-

1- Allowable Bearing Pressure =3.5 kg/cm2 for isolated footing & 3.0 kg/cm2 for strip footing
Foundation Depth as shown in details.
2- Foundation designed for 4 floors
3- Use concrete :-
- B 300 for columns, column neck
- B 300 for foundations, slabs, shear & retaining walls and stairs.
- B 300 for slabs on grade.
- B 300 for baking stone walls and fence walls.
- B200 for blinding.
4- Concrete cover as follows:-
- 50mm for footings.
- 50mm for columns & ground beams below grade.
- 25mm for walls, columns, beams, and slabs.
5- All structural steel used is high tensile deformed bars of Fy = 4200 kg/cm2.
6- All concrete, structural steel, blocks must tested and approved by consultant.
7- All concrete members and works below finished gr. level must be insulated with two coats of bitumen.

LEGEND

SECTION NUMBER
REFERENCE SHEET NUMBER

DETAIL NUMBER
REFERENCE SHEET NUMBER

FLOOR FINISH LEVEL
FLOOR CONCRETE LEVEL

LEVEL SIGN IN PLAN

WINDOW NUMBER
REFERENCE SHEET NUMBER

DOOR NUMBER
REFERENCE SHEET NUMBER

RC CONCRETE FOR COL.
RC CONCRETE FOR WALLS
CONCRETE
STONE WALL
HOLLOW BLOCKS
INSOLATION MATERIAL

REVISIONS

No.	DESCRIPTION	DATE

OWNER: STATE OF PALESTINE
MINISTRY OF EDUCATION
D.G. BUILDINGS

PROJECT NO: 2501/2025

CONTRACTING AUTHORITY: Enabel
ENABEL
Belgian Development Agency

FUNDED BY: Belgium
partner in development

PROJECT NAME:
Public works contract for the 'Construction of Al-Bakri Green Girls' School In Hebron
Navision Code: PSE22001-10075

SHEET NAME:
PROTOTYPE STRUCTURAL DETAILS FOR RETAINING WALL (7)

LOCATION:
City: HEBRON GOVERNATE: HEBRON
BLOCK: 34425 PLOT NO:232 QUARTER/ LOCATION: AL-SHAABA

JOINT VENTURE
iproplan® Planungsgesellschaft mbH Consulting Engineers And Architects
Consulting Engineers
REGISTRATION No. 02
HEBRON - PALESTINE
TEL 02-2650202 - 0599-0145 FAX 02-2650157
E-mail: medar@medar-consulting.com P.O.BOX 3030

DESIGNED	Mohammad al bada		SCALE	
CHECKED	Maysa abdelfattah		DATE	AUGUST 2025
APPROVED	Khaled Muhanna		DRG. No.	SD-16
DRAWN	AUTO CAD			

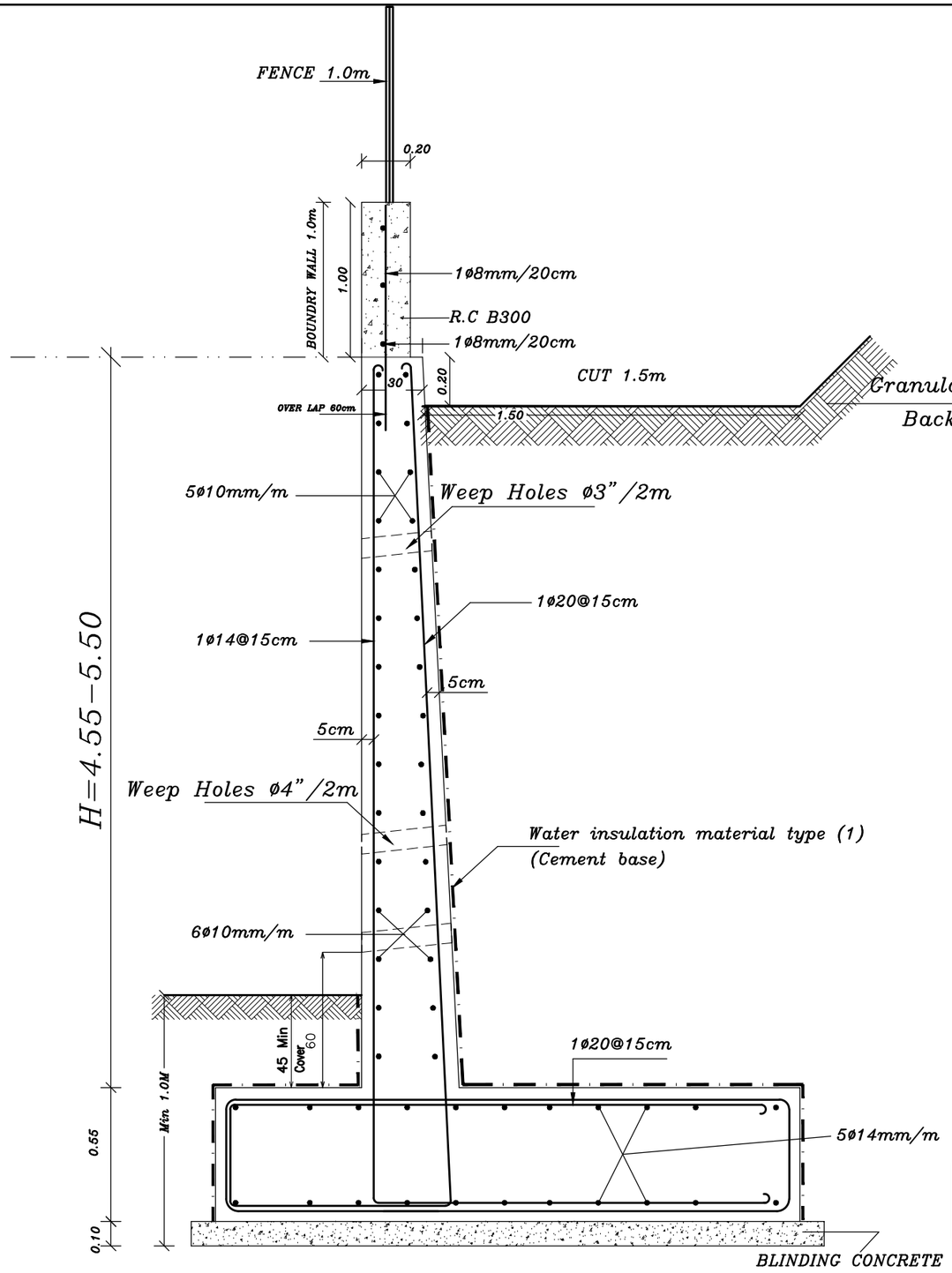

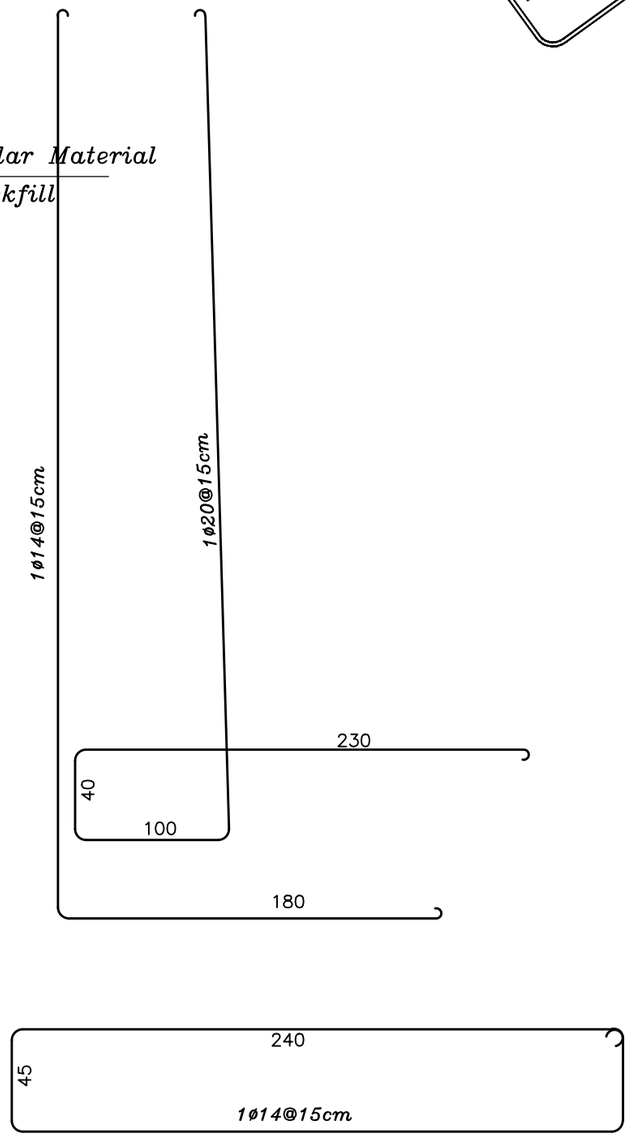

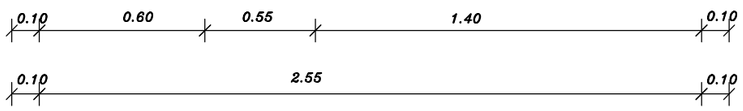

SEC. 9-9 IN RETAINING-WALL
(H=4.55-5.50)

Scale 1:20

- Expantion Joint used every 8-12 m length and every change of direction .
- Weep Holes used P.V.C ø4" every 2 m in ver. & horiz. direction .
- Backfilling soil friction (ø) must be equal or greater than 30°.

ISSUED FOR TENDERING

NOTES:-

- ALL DIMENSIONS ARE IN M.UNLESS NOTED OTHERWISE
- ALL LEVELS ARE IN M. UNLESS NOTED OTHERWISE
- DO NOT SCALE FROM DRAWINGS.

STRUCTURAL NOTES:-

1- Allowable Bearing Pressure =3.5 kg/cm2 for isolated footing & 3.0 kg/cm2 for strip footing
Foundation Depth as shown in details.
2- Foundation designed for 4 floors
3- Use concrete :-
- B 300 for columns, column neck
- B 300 for foundations, slabs, shear & retaining walls and stairs.
- B 300 for slabs on grade.
- B 300 for balding stone walls and fence walls.
- B200 for blinding.
4- Concrete cover as follows:-
- 50mm for footings.
- 50mm for columns & ground beams below grade.
- 25mm for walls, columns, beams, and slabs.
5- All structural steel used is high tensile deformed bars of Fy = 4200 kg/cm2.
6- All concrete, structural steel, blocks must tested and approved by consultant.
7- All concrete members and works below finished gr. level must be insulated with two coats of bitumen.

LEGEND

SECTION NUMBER / REFERENCE SHEET NUMBER
DETAIL NUMBER / REFERENCE SHEET NUMBER
FLOOR FINISH LEVEL
FLOOR CONCRETE LEVEL
LEVEL SIGN IN PLAN
WINDOW NUMBER / REFERENCE SHEET NUMBER
DOOR NUMBER / REFERENCE SHEET NUMBER
RC CONCRETE FOR COL.
RC CONCRETE FOR WALLS
CONCRETE
STONE WALL
HOLLOW BLOCKS
INSOLATION MATERIAL

REVISIONS

No.	DESCRIPTION	DATE

OWNER: STATE OF PALESTINE
MINISTRY OF EDUCATION
D.G. BUILDINGS

PROJECT NO: 2501/2025

CONTRACTING AUTHORITY: Enabel
ENABEL
Belgian Development Agency

FUNDED BY: Belgium partner in development

PROJECT NAME:
Public works contract for the 'Construction of Al-Bakri Green Girls' School in Hebron
Navision Code: PSE22001-10075

SHEET NAME:
PROTOTYPE STRUCTURAL DETAILS FOR RETAINING WALL (8)

LOCATION:
City: HEBRON — GOVERNATE: HEBRON
BLOCK: 34425 — PLOT NO:232 — QUARTER/ LOCATION: AL-SHAABA

JOINT VENTURE
iproplan Planungsgesellschaft mbH Consulting Engineers and Architects
Modaqa Consulting Engineers
REGISTRATION NO. 42
AL-BIREH - PALESTINE
TEL:02-2406202 - 2955145 FAX:02-2404157
E-mail: modaqa@modaqa-consulting.com P.O.BOX 3059

DESIGNED	Mohammad al bada	SCALE	
CHECKED	Maysa abdelfattah	DATE	AUGUST 2025
APPROVED	Khaled Muhanna	DRG. No.	SD-17
DRAWN	AUTO CAD		

- Expantion Joint used every 8–12 m length and every change of direction .
- Weep Holes used P.V.C ø4" every 2 m in ver. & horiz. direction .
- Backfilling soil friction (ø) must be equal or greater than 30°.

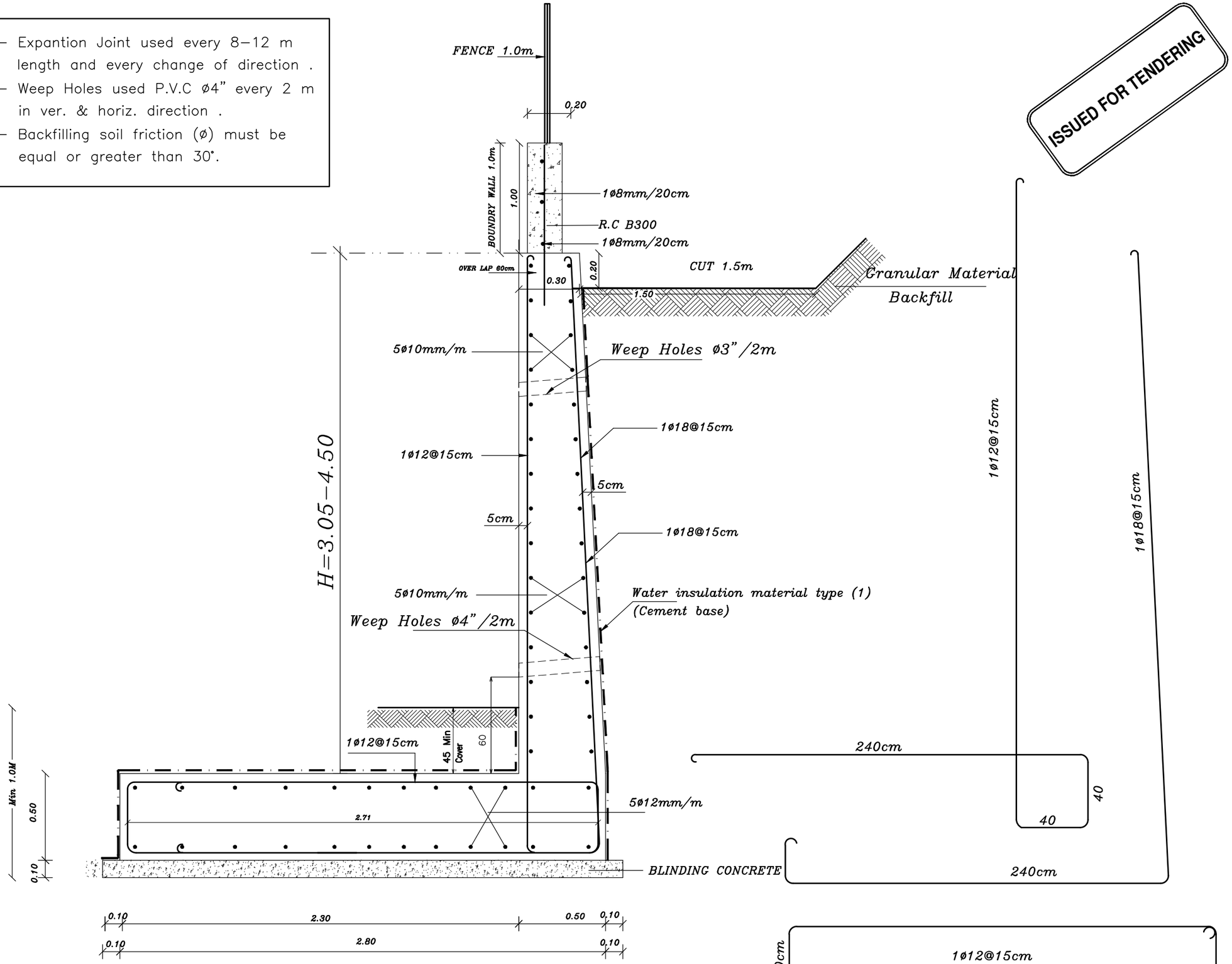

ISSUED FOR TENDERING

SEC. 10–10 IN RETAINING–WALL (H=3.05–4.50)

Scale 1:20

NOTES:–

- ALL DIMENSIONS ARE IN M.UNLESS NOTED OTHERWISE
- ALL LEVELS ARE IN M. UNLESS NOTED OTHERWISE
- DO NOT SCALE FROM DRAWINGS.

STRUCTURAL NOTES:–

1– Allowable Bearing Pressure =3.5 kg/cm2 for isolated footing & 3.0 kg/cm2 for strip footing
Foundation Depth as shown in details.
2– Foundation designed for 4 floors
3– Use concrete :–
- B 300 for columns, column neck
- B 300 for foundations, slabs, shear & retaining walls and stairs.
- B 300 for slabs on grade.
- B 300 for balding stone walls and fence walls.
- B200 for blinding.

4– Concrete cover as follows:–
- 50mm for footings.
- 50mm for columns & ground beams below grade.
- 25mm for walls, columns, beams, and slabs.

5– All structural steel used is high tensile deformed bars of Fy = 4200 kg/cm2.

6– All concrete, structural steel, blocks must tested and approved by consultant.

7– All concrete members and works below finished gr. level must be insulated with two coats of bitumen.

LEGEND

SECTION NUMBER / REFERENCE SHEET NUMBER
DETAIL NUMBER / REFERENCE SHEET NUMBER
FLOOR FINISH LEVEL / FLOOR CONCRETE LEVEL
LEVEL SIGN IN PLAN
WINDOW NUMBER / REFERENCE SHEET NUMBER
DOOR NUMBER / REFERENCE SHEET NUMBER
RC CONCRETE FOR COL.
RC CONCRETE FOR WALLS
CONCRETE
STONE WALL
HOLLOW BLOCKS
INSOLATION MATERIAL

REVISIONS

No.	DESCRIPTION	DATE

OWNER: STATE OF PALESTINE
MINISTRY OF EDUCATION
D.G. BUILDINGS

PROJECT NO: 2501/2025

CONTRACTING AUTHORITY: Enabel
ENABEL
Belgian Development Agency

FUNDED BY: Belgium partner in development

PROJECT NAME:
Public works contract for the 'Construction of Al-Bakri Green Girls' School In Hebron
Navision Code: PSE22001-10075

SHEET NAME:
PROTOTYPE STRUCTURAL DETAILS FOR RETAINING WALL (9)

LOCATION:
City: HEBRON — GOVERNATE: HEBRON
BLOCK: 34425 — PLOT NO:232 — QUARTER/ LOCATION: AL-SHAABA

JOINT VENTURE
iproplan Planungsgesellschaft mbH Consulting Engineers And Architects
Modaqa Consulting Engineers
REGISTRATION NO. 10
AL-BIREH - PALESTINE
TEL:02-2406202 - 2405145 FAX:02-2406157
E-mail: modaqa@modaqa-consulting.com P.O.BOX 3030

DESIGNED	Mohammad al bada		SCALE	
CHECKED	Maysa abdelfattah		DATE	AUGUST 2025
APPROVED	Khaled Muhanna		DRG. No.	SD–18
DRAWN	AUTO CAD			

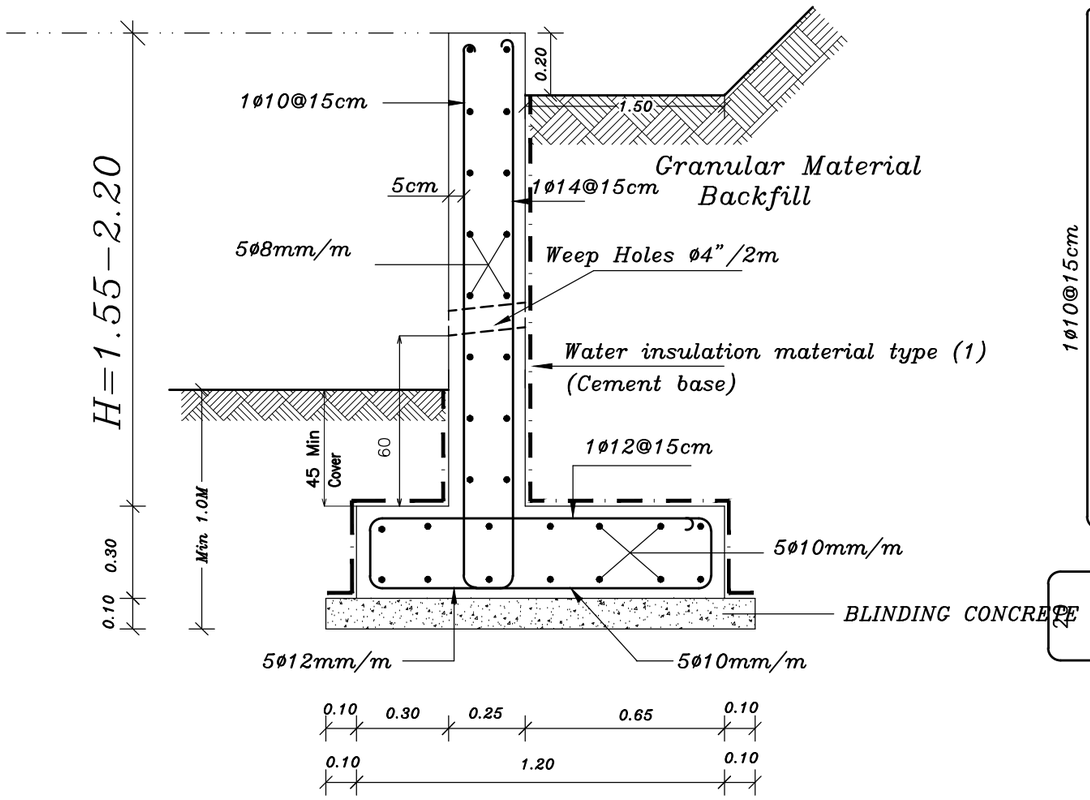

SEC. 11-11 IN RETAINING-WALL
(H=1.55-2.20)

Scale 1:20

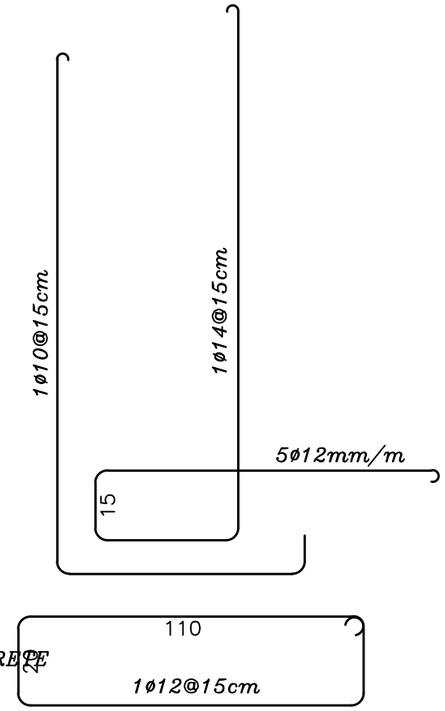

ISSUED FOR TENDERING

- Expantion Joint used every 8-12 m length and every change of direction .
- Weep Holes used P.V.C ø4" every 2 m in ver. & horiz. direction .
- Backfilling soil friction (ø) must be equal or greater than 30°.

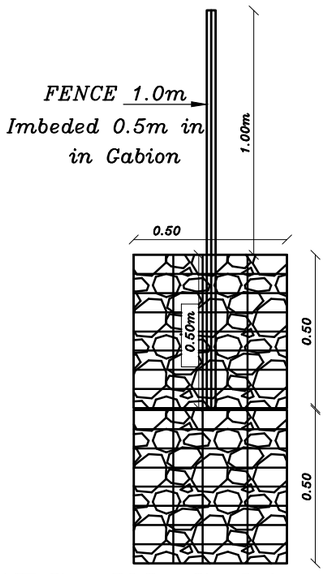

SEC. IN Gabion wall

Scale 1:20

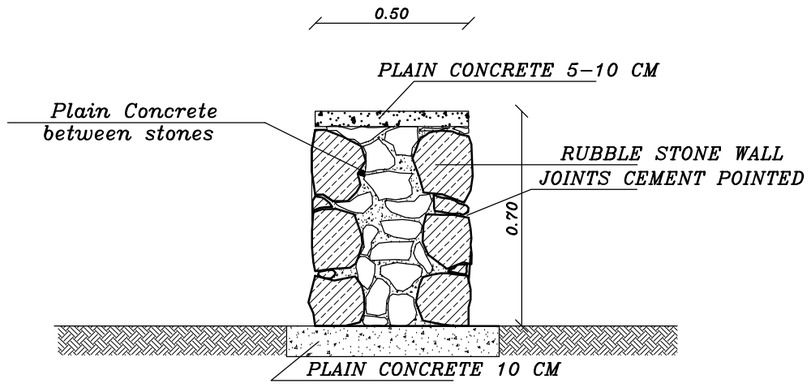

SEC. 13-13 IN RUBBLE STONE WALL

Scale 1:20

NOTES:-

- ALL DIMENSIONS ARE IN M.UNLESS NOTED OTHERWISE
- ALL LEVELS ARE IN M. UNLESS NOTED OTHERWISE
- DO NOT SCALE FROM DRAWINGS.

STRUCTURAL NOTES:-

1- Allowable Bearing Pressure =3.5 kg/cm2 for isolated footing & 3.0 kg/cm2 for strip footing
Foundation Depth as shown in details.
2- Foundation designed for 4 floors
3- Use concrete :-
- B 300 for columns, column neck
- B 300 for foundations, slabs, shear & retaining walls and stairs.
- B 300 for slabs on grade.
- B 300 for balcing stone walls and fence walls.
- B200 for blinding.

4- Concrete cover as follows:-
- 50mm for footings.
- 50mm for columns & ground beams below grade.
- 25mm for walls, columns, beams, and slabs.

5- All structural steel used is high tensile deformed bars of Fy = 4200 kg/cm2.

6- All concrete, structural steel, blocks must tested and approved by consultant.

7- All concrete members and works below finished gr. level must be insulated with two coats of bitumen.

LEGEND

SECTION NUMBER / REFERENCE SHEET NUMBER
DETAIL NUMBER / REFERENCE SHEET NUMBER
FLOOR FINISH LEVEL / FLOOR CONCRETE LEVEL
LEVEL SIGN IN PLAN
WINDOW NUMBER / REFERENCE SHEET NUMBER
DOOR NUMBER / REFERENCE SHEET NUMBER
RC CONCRETE FOR COL.
RC CONCRETE FOR WALLS
CONCRETE
STONE WALL
HOLLOW BLOCKS
INSOLATION MATERIAL

REVISIONS

No.	DESCRIPTION	DATE

OWNER: STATE OF PALESTINE
MINISTRY OF EDUCATION
D.G. BUILDINGS

PROJECT NO: 2501/2025

CONTRACTING AUTHORITY: Enabel
ENABEL
Belgian Development Agency

FUNDED BY: Belgium partner in development

PROJECT NAME:
Public works contract for the 'Construction of Al-Bakri Green Girls' School In Hebron
Navision Code: PSE22001-10075

SHEET NAME:
PROTOTYPE STRUCTURAL DETAILS FOR RETAINING WALL (10)

LOCATION:
City: HEBRON GOVERNATE: HEBRON
BLOCK: 34425 PLOT NO:232 QUARTER/ LOCATION: AL-SHAABA

JOINT VENTURE
iproplan Planungsgesellschaft mbH Consulting Engineers and Architects
Consulting Engineers
REGISTRATION No. 52
AL-BIREH - PALESTINE
TEL: 00-970/02/2 - 2800145 FAX: 00-970/02/2
E-mail: medad@medad-consulting.com P.O.BOX 3050

DESIGNED	Mohammad al bada		SCALE	
CHECKED	Maysa abdelfattah		DATE	AUGUST 2025
APPROVED	Khaled Muhanna		DRG. No.	SD-19
DRAWN	AUTO CAD			

- Expantion Joint used every 8–12 m length and every change of direction .
- Weep Holes used P.V.C ø4" every 2 m in ver. & horiz. direction .
- Backfilling soil friction (ø) must be equal or greater than 30°.

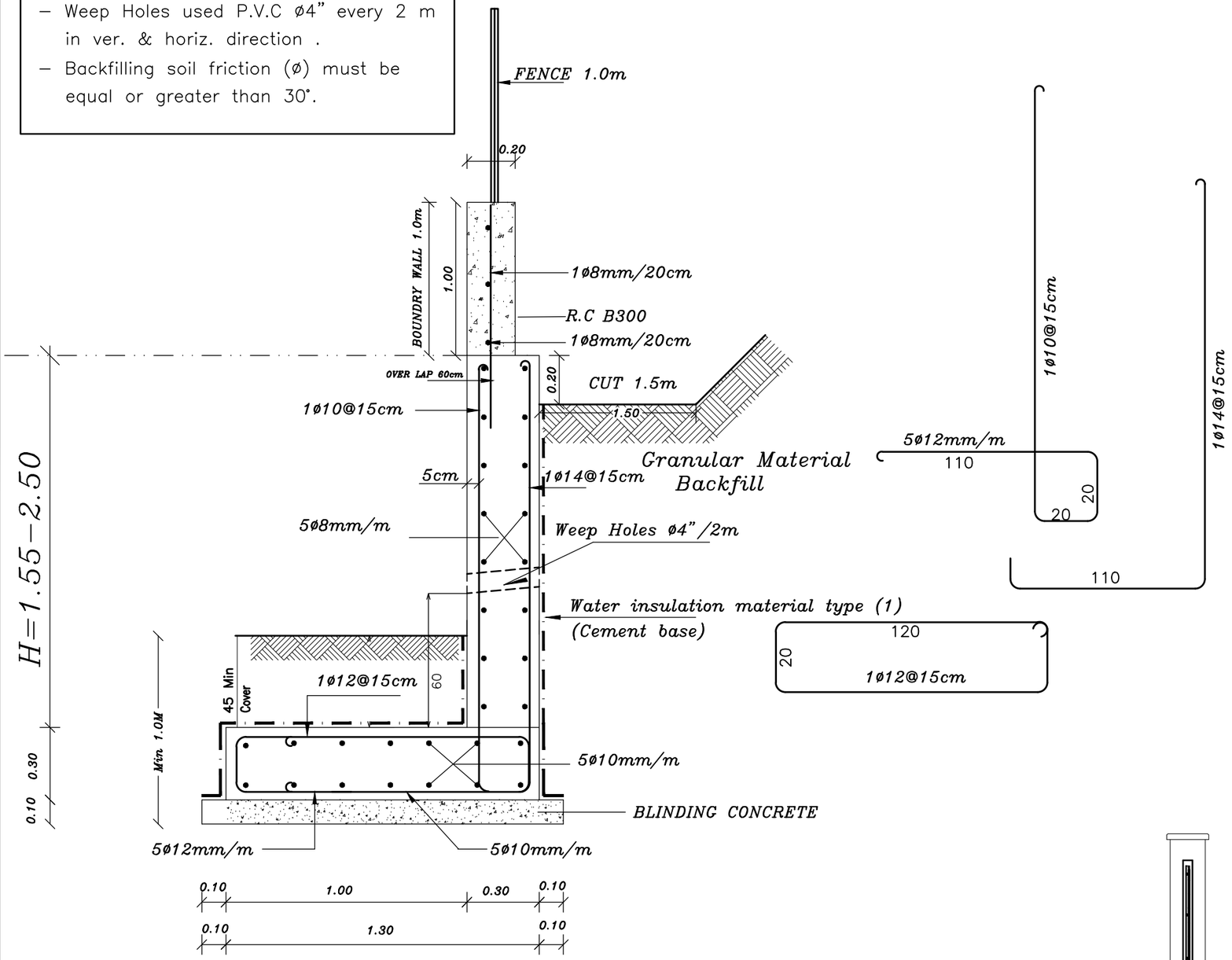

SEC. 12–12 IN RETAINING–WALL
(H=1.55–2.20)
Scale 1:20

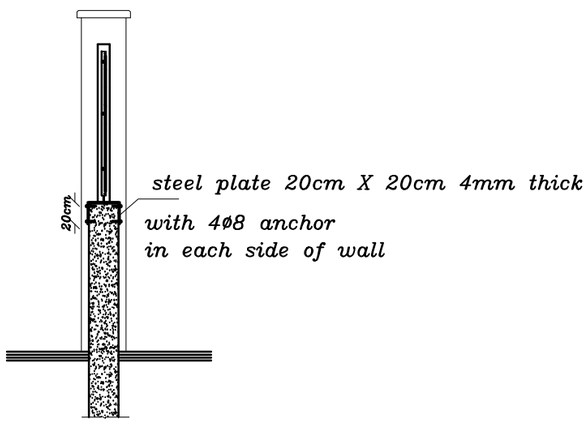

SEC IN (14–14) EXISTING WALL WITH FENCE

ISSUED FOR TENDERING

NOTES:–

- ALL DIMENSIONS ARE IN M.UNLESS NOTED OTHERWISE
- ALL LEVELS ARE IN M. UNLESS NOTED OTHERWISE
- DO NOT SCALE FROM DRAWINGS.

STRUCTURAL NOTES:–

1– Allowable Bearing Pressure =3.5 kg/cm2 for isolated footing & 3.0 kg/cm2 for strip footing
Foundation Depth as shown in details.
2– Foundation designed for 4 floors
3– Use concrete :–
- B 300 for columns, column neck
- B 300 for foundations, slabs, shear & retaining walls and stairs.
- B 300 for slabs on grade.
- B 300 for balding stone walls and fence walls.
- B200 for blinding.

4– Concrete cover as follows:–
- 50mm for footings.
- 50mm for columns & ground beams below grade.
- 25mm for walls, columns, beams, and slabs.

5– All structural steel used is high tensile deformed bars of Fy = 4200 kg/cm2.

6– All concrete, structural steel, blocks must tested and approved by consultant.

7– All concrete members and works below finished gr. level must be insulated with two coats of bitumen.

LEGEND

SECTION NUMBER / REFERENCE SHEET NUMBER
DETAIL NUMBER / REFERENCE SHEET NUMBER
FLOOR FINISH LEVEL
FLOOR CONCRETE LEVEL
LEVEL SIGN IN PLAN
WINDOW NUMBER / REFERENCE SHEET NUMBER
DOOR NUMBER / REFERENCE SHEET NUMBER
RC CONCRETE FOR COL.
RC CONCRETE FOR WALLS
CONCRETE
STONE WALL
HOLLOW BLOCKS
INSOLATION MATERIAL

REVISIONS

No.	DESCRIPTION	DATE

OWNER: STATE OF PALESTINE
MINISTRY OF EDUCATION
D.G. BUILDINGS

PROJECT NO: 2501/2025

CONTRACTING AUTHORITY: Enabel
ENABEL
Belgian Development Agency

FUNDED BY: Belgium
partner in development

PROJECT NAME:
Public works contract for the 'Construction of Al-Bakri Green Girls' School In Hebron
Navision Code: PSE22001-10075

SHEET NAME:
PROTOTYPE STRUCTURAL DETAILS FOR RETAINING WALL (11)

LOCATION:
City: HEBRON — GOVERNATE: HEBRON
BLOCK: 34425 — PLOT NO:232 — QUARTER/ LOCATION: AL-SHAABA

JOINT VENTURE
iproplan Planungsgesellschaft mbH — Consulting Engineers And Architects
Consulting Engineers

DESIGNED	Mohammad al bada		SCALE	
CHECKED	Moysa abdelfattah		DATE	AUGUST 2025
APPROVED	Khaled Muhanna		DRG. No.	SD–20
DRAWN	AUTO CAD			

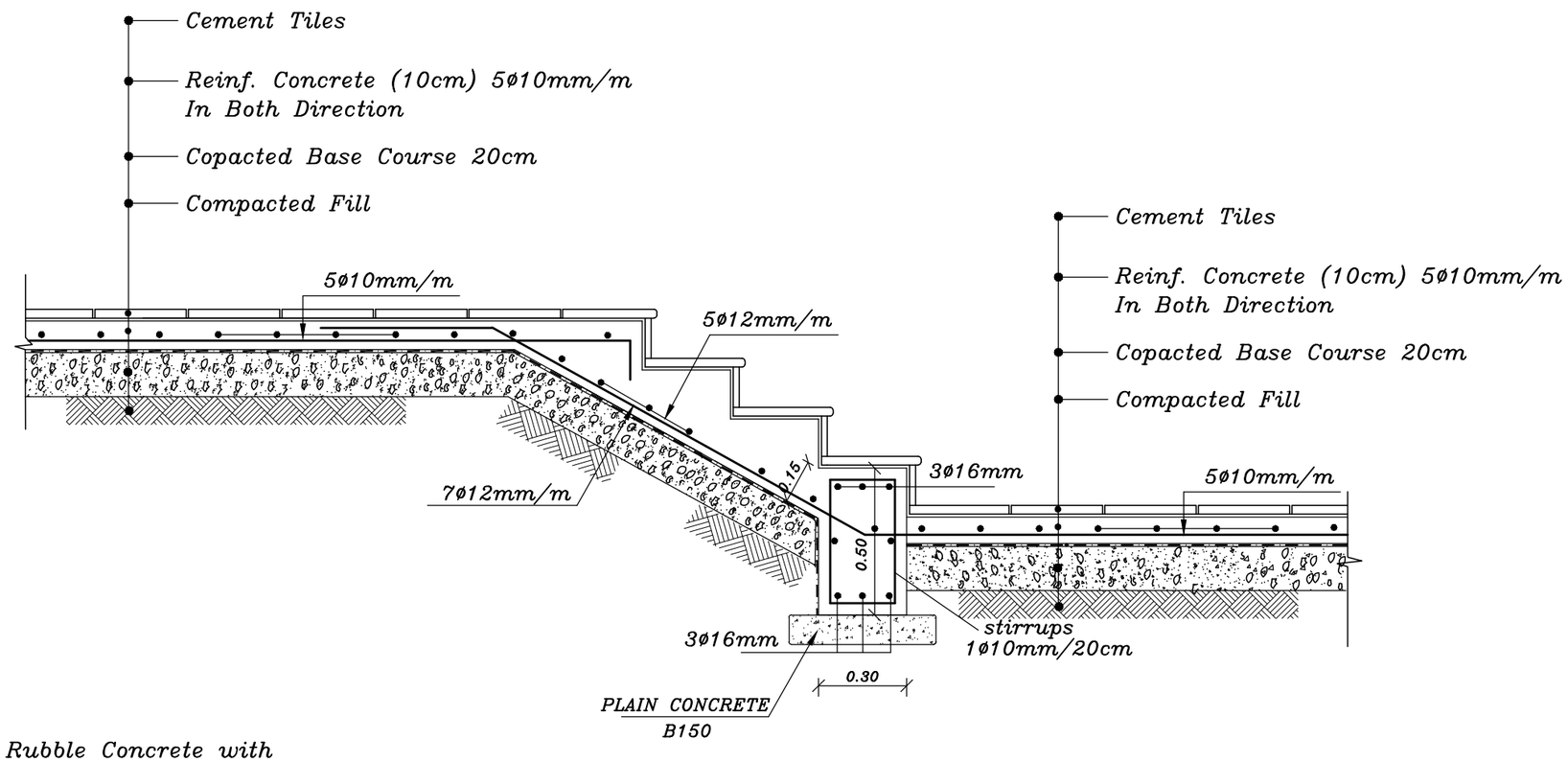

SECTION (A–A) IN EXTERNAL STAIRS

SCALE 1:20

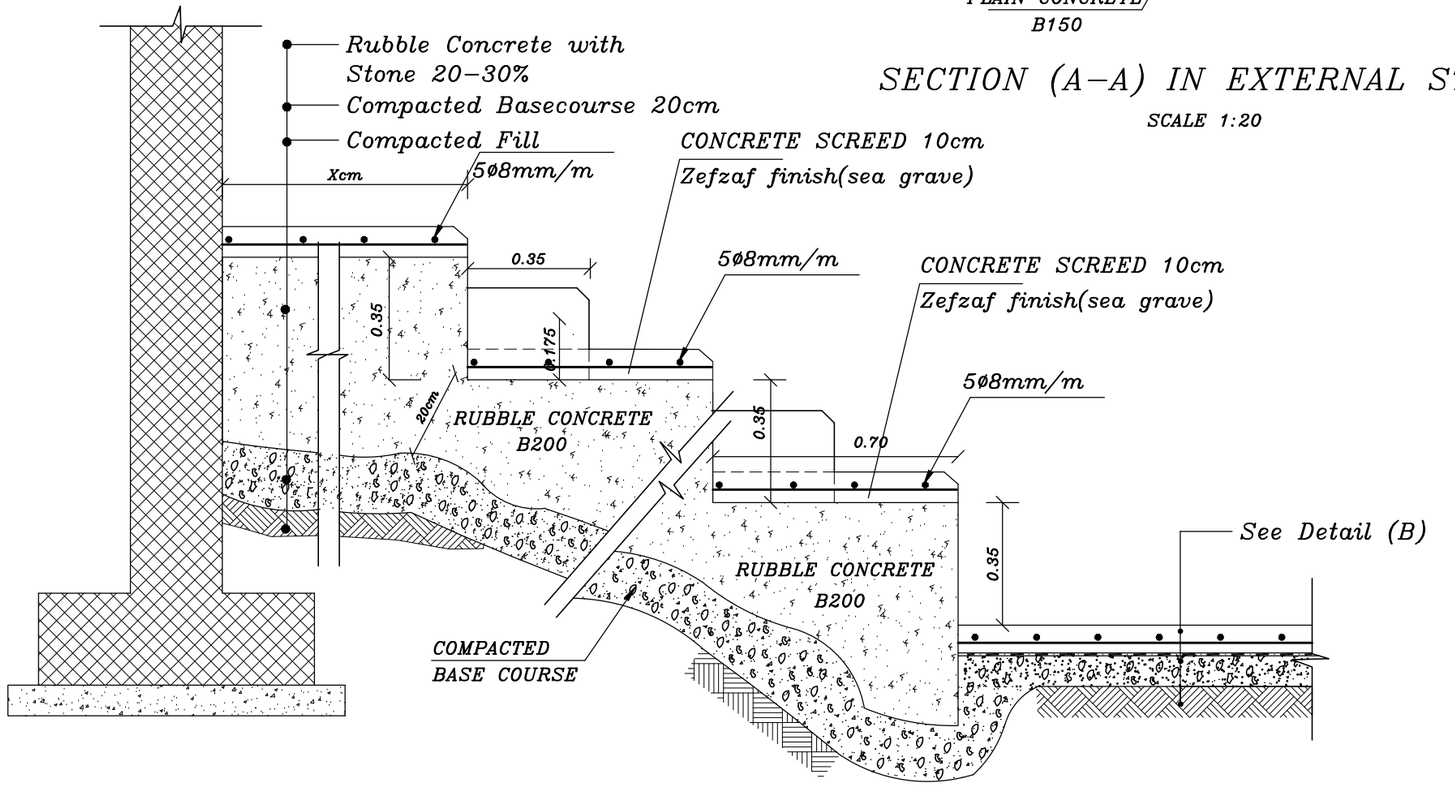

SECTION (I–I) IN EXTERNAL SEATING

SCALE 1:20

ISSUED FOR TENDERING

NOTES:–

- ALL DIMENSIONS ARE IN M.UNLESS NOTED OTHERWISE
- ALL LEVELS ARE IN M. UNLESS NOTED OTHERWISE
- DO NOT SCALE FROM DRAWINGS.

STRUCTURAL NOTES:–

1– Allowable Bearing Pressure =3.5 kg/cm2 for isolated footing & 3.0 kg/cm2 for strip footing
Foundation Depth as shown in details.
2– Foundation designed for 4 floors
3– Use concrete :–
- B 300 for columns, column neck
- B 300 for foundations, slabs, shear & retaining walls and stairs.
- B 300 for slabs on grade.
- B 300 for baking stone walls and fence walls.
- B200 for blinding.

4– Concrete cover as follows:–
- 50mm for footings.
- 50mm for columns & ground beams below grade.
- 25mm for walls, columns, beams, and slabs.

5– All structural steel used is high tensile deformed bars of Fy = 4200 kg/cm2.

6– All concrete, structural steel, blocks must tested and approved by consultant.

7– All concrete members and works below finished gr. level must be insulated with two coats of bitumen.

LEGEND

SECTION NUMBER
REFERENCE SHEET NUMBER

DETAIL NUMBER
REFERENCE SHEET NUMBER

FLOOR FINISH LEVEL
FLOOR CONCRETE LEVEL

LEVEL SIGN IN PLAN

WINDOW NUMBER
REFERENCE SHEET NUMBER

DOOR NUMBER
REFERENCE SHEET NUMBER

RC CONCRETE FOR COL.
RC CONCRETE FOR WALLS
CONCRETE
STONE WALL
HOLLOW BLOCKS
INSOLATION MATERIAL

REVISIONS

No.	DESCRIPTION	DATE

OWNER: STATE OF PALESTINE
MINISTRY OF EDUCATION
D.G. BUILDINGS

PROJECT NO: 2501/2025

CONTRACTING AUTHORITY: Enabel
ENABEL
Belgian Development Agency

FUNDED BY: Belgium
partner in development

PROJECT NAME:
Public works contract for the
'Construction of Al-Bakri Green Girls' School
In Hebron
Navision Code: PSE22001-10075

SHEET NAME:
PROTOTYPE STRUCTURAL DETAILS
FOR EXTERNAL WORKS (1)

LOCATION:
City: HEBRON
BLOCK: 34425 PLOT NO:232
GOVERNATE: HEBRON
QUARTER/ LOCATION: AL-SHAABA

JOINT VENTURE
iproplan Planungsgesellschaft mbH Consulting Engineers And Architects
Consulting Engineers

DESIGNED	Mohammad al bada		SCALE	
CHECKED	Maysa abdelfattah		DATE	AUGUST 2025
APPROVED	Khaled Muhanna		DRG. No.	SD–21
DRAWN	AUTO CAD			

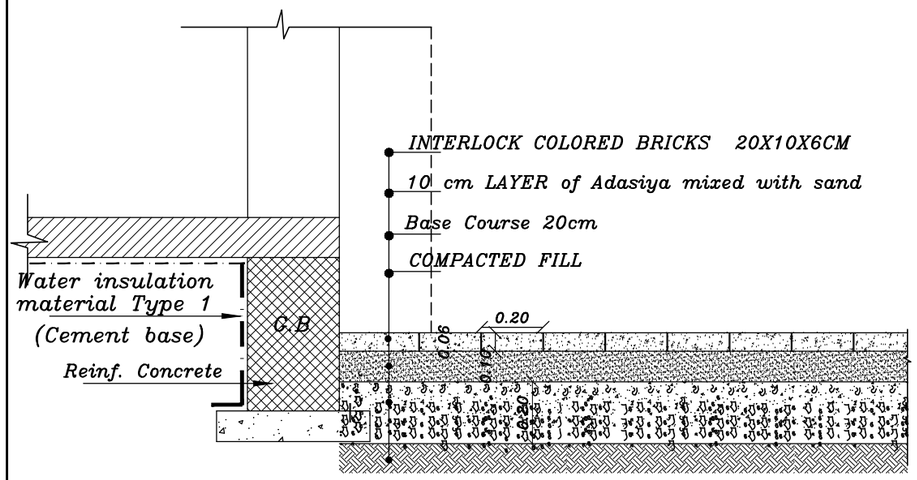

SECTION (B–B) IN SIDEWALK

SCALE 1:20

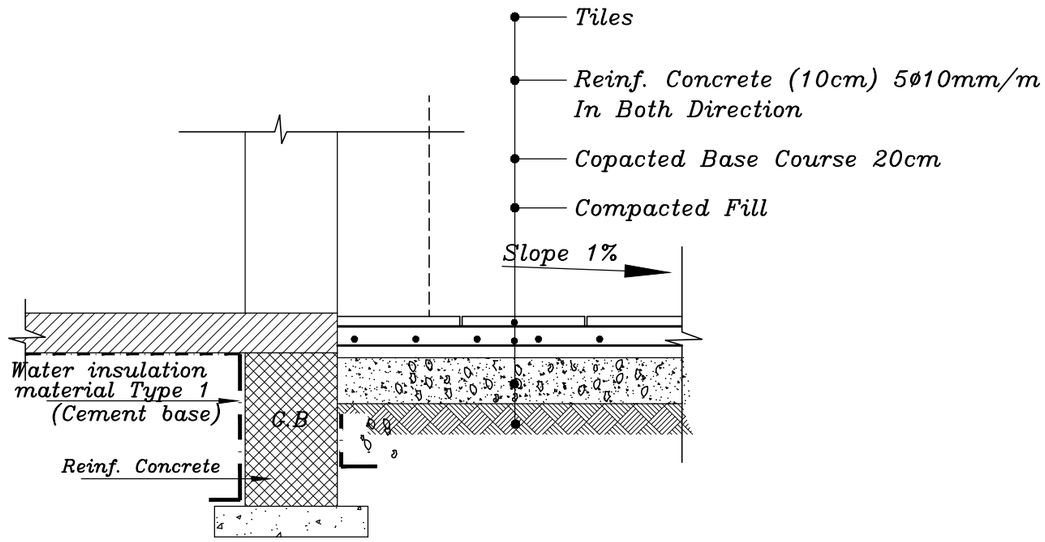

SECTION (C–C) IN SIDEWALK

SCALE 1:20

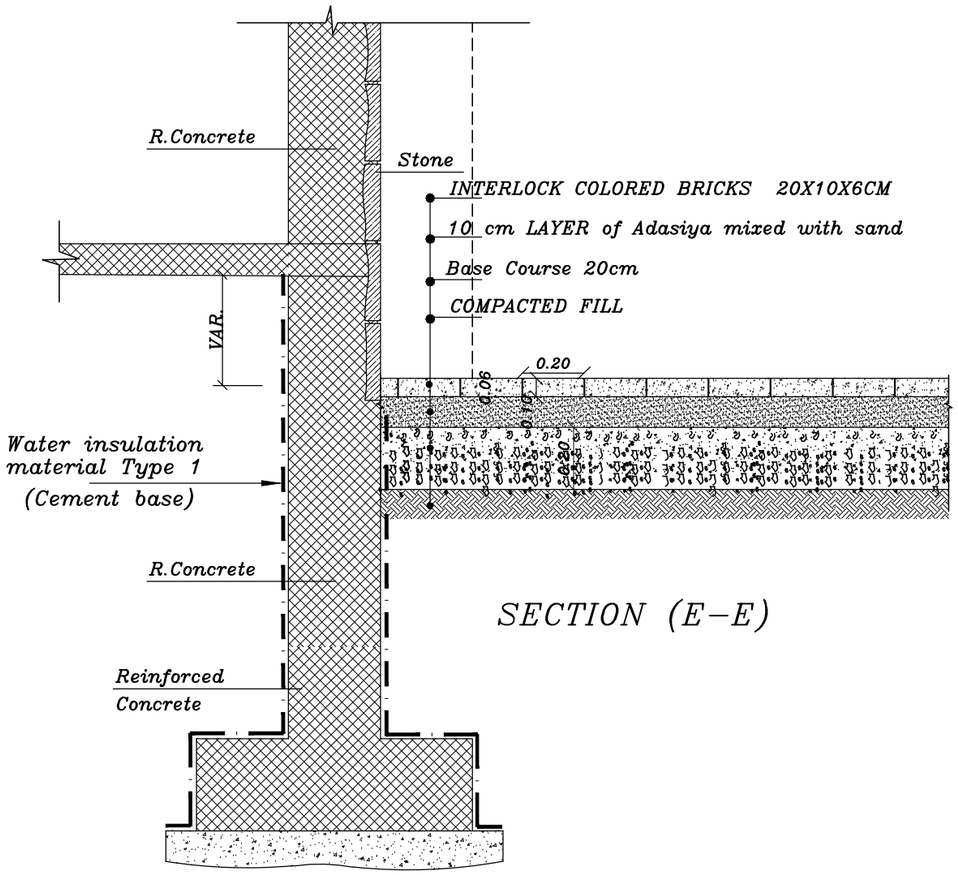

SECTION (E–E)

ISSUED FOR TENDERING

NOTES:–

- ALL DIMENSIONS ARE IN M.UNLESS NOTED OTHERWISE
- ALL LEVELS ARE IN M. UNLESS NOTED OTHERWISE
- DO NOT SCALE FROM DRAWINGS.

STRUCTURAL NOTES:–

1– Allowable Bearing Pressure =3.5 kg/cm2 for isolated footing & 3.0 kg/cm2 for strip footing
Foundation Depth as shown in details.
2– Foundation designed for 4 floors
3– Use concrete :–
- B 300 for columns, column neck
- B 300 for foundations, slabs, shear & retaining walls and stairs.
- B 300 for slabs on grade.
- B 300 for balding stone walls and fence walls.
- B200 for blinding.

4– Concrete cover as follows:–
- 50mm for footings.
- 50mm for columns & ground beams below grade.
- 25mm for walls, columns, beams, and slabs.

5– All structural steel used is high tensile deformed bars of Fy = 4200 kg/cm2.

6– All concrete, structural steel, blocks must tested and approved by consultant.

7– All concrete members and works below finished gr. level must be insulated with two coats of bitumen.

LEGEND

SECTION NUMBER
REFERENCE SHEET NUMBER

DETAIL NUMBER
REFERENCE SHEET NUMBER

FLOOR FINISH LEVEL
FLOOR CONCRETE LEVEL

LEVEL SIGN IN PLAN

WINDOW NUMBER
REFERENCE SHEET NUMBER

DOOR NUMBER
REFERENCE SHEET NUMBER

RC CONCRETE FOR COL.
RC CONCRETE FOR WALLS
CONCRETE
STONE WALL
HOLLOW BLOCKS
INSOLATION MATERIAL

REVISIONS

No.	DESCRIPTION	DATE

OWNER: STATE OF PALESTINE
MINISTRY OF EDUCATION
D.G. BUILDINGS

PROJECT NO: 2501/2025

CONTRACTING AUTHORITY: Enabel
ENABEL
Belgian Development Agency

FUNDED BY: Belgium
partner in development

PROJECT NAME:
Public works contract for the 'Construction of Al-Bakri Green Girls' School In Hebron
Navision Code: PSE22001-10075

SHEET NAME:
PROTOTYPE STRUCTURAL DETAILS FOR EXTERNAL WORKS (2)

LOCATION:
City: HEBRON — GOVERNATE: HEBRON
BLOCK: 34425 — PLOT NO:232 — QUARTER/ LOCATION: AL-SHAABA

JOINT VENTURE
iproplan Planungsgesellschaft mbH Consulting Engineers And Architects
Consulting Engineers
REGISTRATION No. 62
RAMALLAH - PALESTINE
TEL 02-2952920 / 2951145 FAX 02-2404157
E-mail: madar@madar-consulting.com P.O.BOX 3039

DESIGNED	Mohammad al bada		SCALE	
CHECKED	Maysa abdelfattah		DATE	AUGUST 2025
APPROVED	Khaled Muhanna		DRG. No.	SD–22
DRAWN	AUTO CAD			

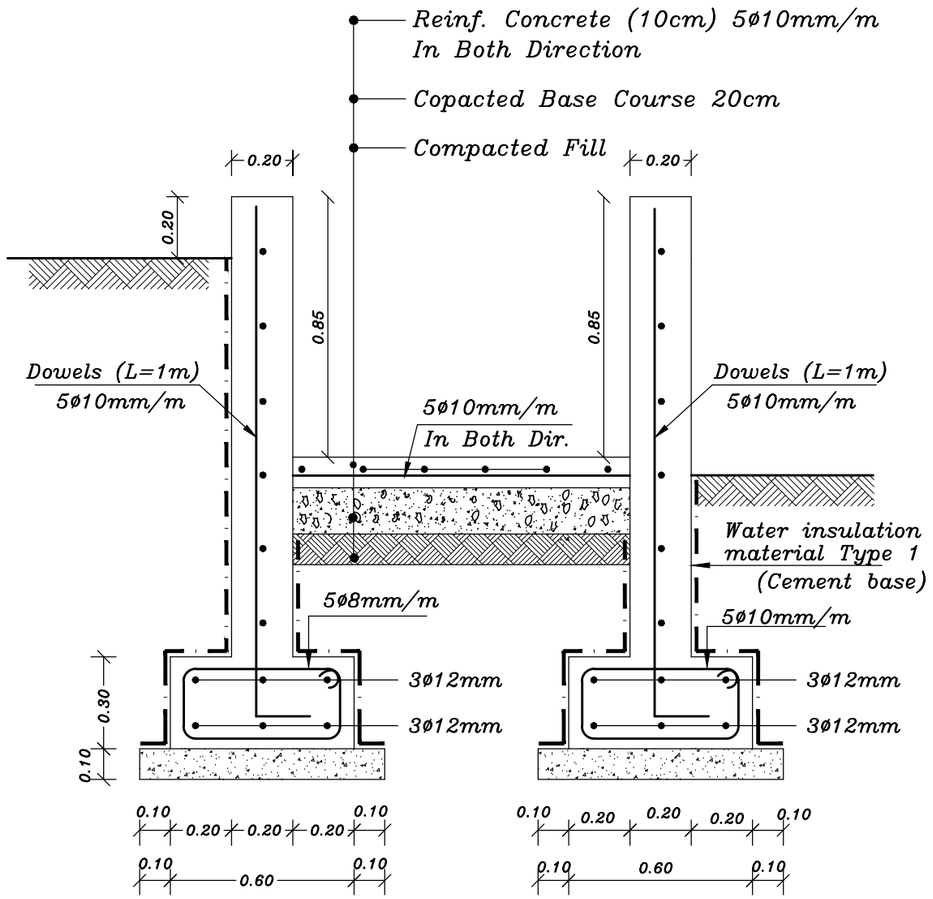

SECTION (FLOWER BOXES)

SCALE 1:20

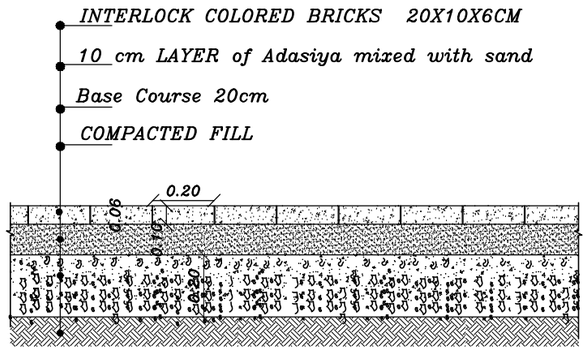

(DETAIL F)

TYPICAL SECTION IN INTERLOCK AREAS

SCALE 1:20

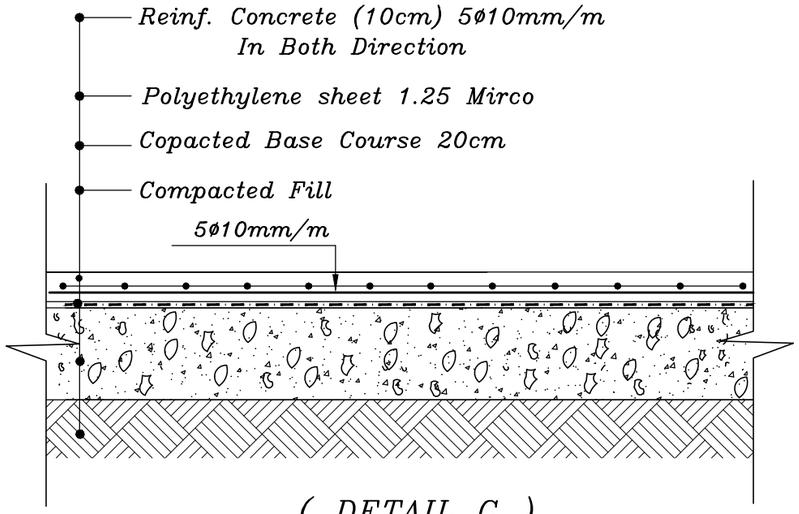

(DETAIL G)

TYPICAL SECTION IN PLAYING AREA

SCALE 1:10

ISSUED FOR TENDERING

NOTES:–

- ALL DIMENSIONS ARE IN M.UNLESS NOTED OTHERWISE
- ALL LEVELS ARE IN M. UNLESS NOTED OTHERWISE
- DO NOT SCALE FROM DRAWINGS.

STRUCTURAL NOTES:–

1– Allowable Bearing Pressure =3.5 kg/cm2 for isolated footing & 3.0 kg/cm2 for strip footing
Foundation Depth as shown in details.
2– Foundation designed for 4 floors
3– Use concrete :–
- B 300 for columns, column neck
- B 300 for foundations, slabs, shear & retaining walls and stairs.
- B 300 for slabs on grade.
- B 300 for baking stone walls and fence walls.
- B200 for blinding.

4– Concrete cover as follows:–
- 50mm for footings.
- 50mm for columns & ground beams below grade.
- 25mm for walls, columns, beams, and slabs.

5– All structural steel used is high tensile deformed bars of Fy = 4200 kg/cm2.

6– All concrete, structural steel, blocks must tested and approved by consultant.

7– All concrete members and works below finished gr. level must be insulated with two coats of bitumen.

LEGEND

SECTION NUMBER
REFERENCE SHEET NUMBER

DETAIL NUMBER
REFERENCE SHEET NUMBER

FLOOR FINISH LEVEL
FLOOR CONCRETE LEVEL

LEVEL SIGN IN PLAN

WINDOW NUMBER
REFERENCE SHEET NUMBER

DOOR NUMBER
REFERENCE SHEET NUMBER

RC CONCRETE FOR COL.
RC CONCRETE FOR WALLS
CONCRETE
STONE WALL
HOLLOW BLOCKS
INSOLATION MATERIAL

REVISIONS

No.	DESCRIPTION	DATE

OWNER: STATE OF PALESTINE
MINISTRY OF EDUCATION
D.G. BUILDINGS

PROJECT NO: 2501/2025

CONTRACTING AUTHORITY: Enabel
ENABEL
Belgian Development Agency

FUNDED BY: Belgium
partner in development

PROJECT NAME:
Public works contract for the 'Construction of Al-Bakri Green Girls' School In Hebron
Navision Code: PSE22001-10075

SHEET NAME:
PROTOTYPE STRUCTURAL DETAILS FOR EXTERNAL WORKS (3)

LOCATION:
City: HEBRON GOVERNATE: HEBRON
BLOCK: 34425 PLOT NO:232 QUARTER/ LOCATION: AL-SHAABA

JOINT VENTURE
iproplan® Planungsgesellschaft mbH Consulting Engineers and Architects
Consulting Engineers
Hebron-Palestine, Al-Bireh - Palestine
TEL: 02-2952932 - 2952140 FAX: 02-2406157
E-mail: mabet@mabet-consulting.com P.O.BOX 3030

DESIGNED	Mohammad al bada		SCALE	
CHECKED	Maysa abdelfattah		DATE	AUGUST 2025
APPROVED	Khaled Muhanna		DRG. No.	SD–23
DRAWN	AUTO CAD			

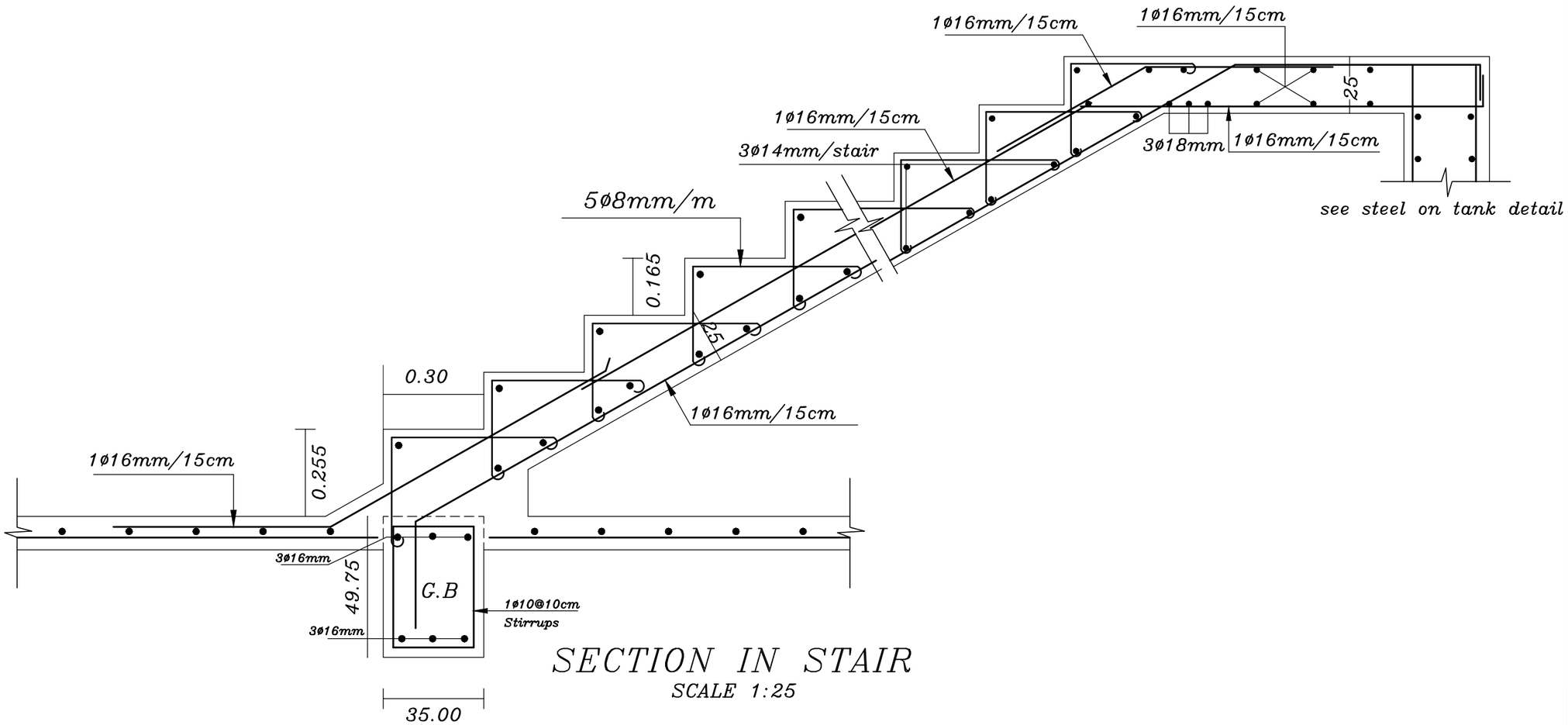

SECTION IN STAIR
SCALE 1:25

ISSUED FOR TENDERING

NOTES:–

- ALL DIMENSIONS ARE IN M.UNLESS NOTED OTHERWISE
- ALL LEVELS ARE IN M. UNLESS NOTED OTHERWISE
- DO NOT SCALE FROM DRAWINGS.

STRUCTURAL NOTES:–

1– Allowable Bearing Pressure =3.5 kg/cm2 for isolated footing & 3.0 kg/cm2 for strip footing
Foundation Depth as shown in details.
2– Foundation designed for 4 floors
3– Use concrete :–
- B 300 for columns, column neck
- B 300 for foundations, slabs, shear & retaining walls and stairs.
- B 300 for slabs on grade.
- B 300 for balding stone walls and fence walls.
- B200 for blinding.

4– Concrete cover as follows:–
- 50mm for footings.
- 50mm for columns & ground beams below grade.
- 25mm for walls, columns, beams, and slabs.

5– All structural steel used is high tensile deformed bars of Fy = 4200 kg/cm2.

6– All concrete, structural steel, blocks must tested and approved by consultant.

7– All concrete members and works below finished gr. level must be insulated with two coats of bitumen.

LEGEND

SECTION NUMBER
REFERENCE SHEET NUMBER

DETAIL NUMBER
REFERENCE SHEET NUMBER

FLOOR FINISH LEVEL
FLOOR CONCRETE LEVEL.

LEVEL SIGN IN PLAN

WINDOW NUMBER
REFERENCE SHEET NUMBER

DOOR NUMBER
REFERENCE SHEET NUMBER

RC CONCRETE FOR COL.
RC CONCRETE FOR WALLS
CONCRETE
STONE WALL
HOLLOW BLOCKS
INSOLATION MATERIAL

REVISIONS

No.	DESCRIPTION	DATE

OWNER:
STATE OF PALESTINE
MINISTRY OF EDUCATION
D.G. BUILDINGS

PROJECT NO: 2501/2025

CONTRACTING AUTHORITY:
Enabel
ENABEL
Belgian Development Agency

FUNDED BY:
Belgium
partner in development

PROJECT NAME:
Public works contract for the 'Construction of Al-Bakri Green Girls' School In Hebron
Navision Code: PSE22001-10075

SHEET NAME:
PROTOTYPE STRUCTURAL DETAILS FOR EXTERNAL WORKS (4)

LOCATION:
City: HEBRON
BLOCK: 34425 PLOT NO:232
GOVERNATE: HEBRON
QUARTER/ LOCATION: AL-SHAABA

JOINT VENTURE
iproplan® Planungsgesellschaft mbH Consulting Engineers And Architects
Consulting Engineers
REGISTRATION No. 02
RAMALLAH - PALESTINE
TEL 02-2950330 / 0599-0145 FAX 02-2400157
E-mail: medar@medar-consulting.com P.O.BOX 3332

DESIGNED	Mohammad al bada		SCALE	
CHECKED	Maysa abdelfattah		DATE	AUGUST 2025
APPROVED	Khaled Muhanna		DRG. No.	SD–24
DRAWN	AUTO CAD			

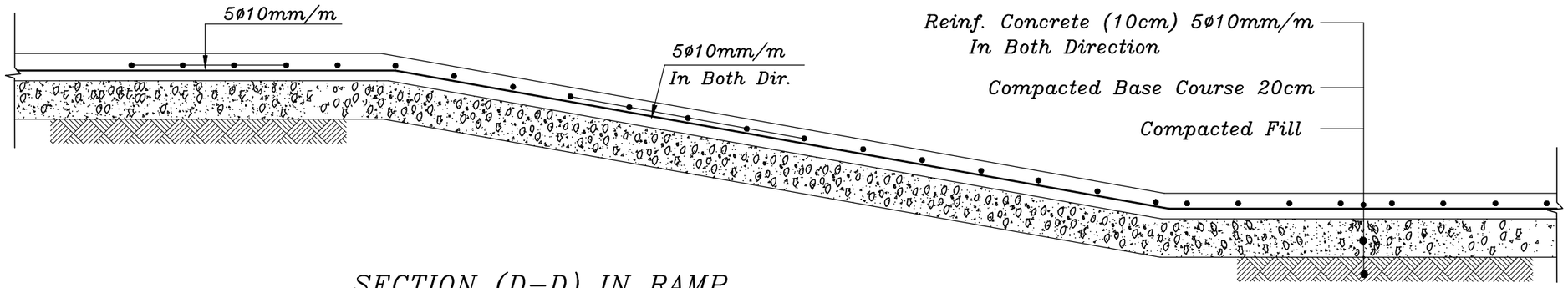

SECTION (D–D) IN RAMP

SCALE 1:20

ISSUED FOR TENDERING

NOTES:–

- ALL DIMENSIONS ARE IN M.UNLESS NOTED OTHERWISE
- ALL LEVELS ARE IN M. UNLESS NOTED OTHERWISE
- DO NOT SCALE FROM DRAWINGS.

STRUCTURAL NOTES:–

1– Allowable Bearing Pressure =3.5 kg/cm2 for isolated footing & 3.0 kg/cm2 for strip footing
Foundation Depth as shown in details.
2– Foundation designed for 4 floors
3– Use concrete :–
- B 300 for columns, column neck
- B 300 for foundations, slabs, shear & retaining walls and stairs.
- B 300 for slabs on grade.
- B 300 for baking stone walls and fence walls.
- B200 for blinding.

4– Concrete cover as follows:–
- 50mm for footings.
- 50mm for columns & ground beams below grade.
- 25mm for walls, columns, beams, and slabs.

5– All structural steel used is high tensile deformed bars of Fy = 4200 kg/cm2.

6– All concrete, structural steel, blocks must tested and approved by consultant.

7– All concrete members and works below finished gr. level must be insulated with two coats of bitumen.

LEGEND

SECTION NUMBER
REFERENCE SHEET NUMBER

DETAIL NUMBER
REFERENCE SHEET NUMBER

FLOOR FINISH LEVEL
FLOOR CONCRETE LEVEL

LEVEL SIGN IN PLAN

WINDOW NUMBER
REFERENCE SHEET NUMBER

DOOR NUMBER
REFERENCE SHEET NUMBER

RC CONCRETE FOR COL.
RC CONCRETE FOR WALLS
CONCRETE
STONE WALL
HOLLOW BLOCKS
INSOLATION MATERIAL

REVISIONS

No.	DESCRIPTION	DATE

OWNER:
STATE OF PALESTINE
MINISTRY OF EDUCATION
D.G. BUILDINGS

PROJECT NO: 2501/2025

CONTRACTING AUTHORITY:
Enabel
ENABEL
Belgian Development Agency

FUNDED BY:
Belgium
partner in development

PROJECT NAME:
Public works contract for the 'Construction of Al-Bakri Green Girls' School In Hebron
Navision Code: PSE22001-10075

SHEET NAME:
PROTOTYPE STRUCTURAL DETAILS FOR EXTERNAL WORKS (5)

LOCATION:
City: HEBRON
BLOCK: 34425 PLOT NO:232
GOVERNATE: HEBRON
QUARTER/ LOCATION: AL-SHAABA

JOINT VENTURE
iproplan® Planungsgesellschaft mbH Consulting Engineers And Architects
Modar Consulting Engineers
REGISTRATION No. 62
HEBRON - PALESTINE
TEL: 02-2252202 - 0599-9-48 FAX: 02-2240157
E-mail: modar@modar-consulting.com P.O.BOX 3332

DESIGNED	Mohammad al bada		SCALE	
CHECKED	Maysa abdelfattah		DATE	AUGUST 2025
APPROVED	Khaled Muhanna		DRG. No.	SD–25
DRAWN	AUTO CAD			

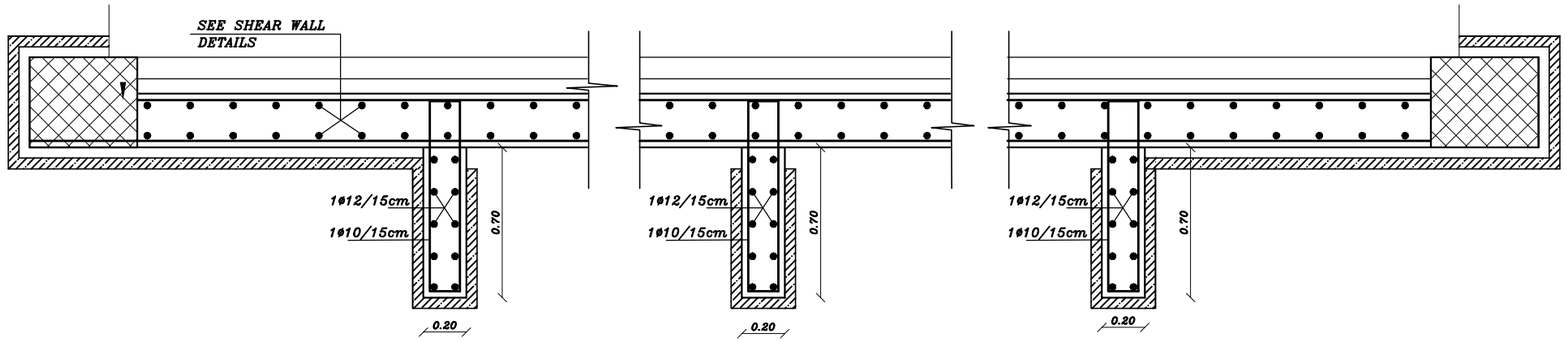

TYPICAL SECTION IN DRINKING FOUNTAIN

SCALE 1:20

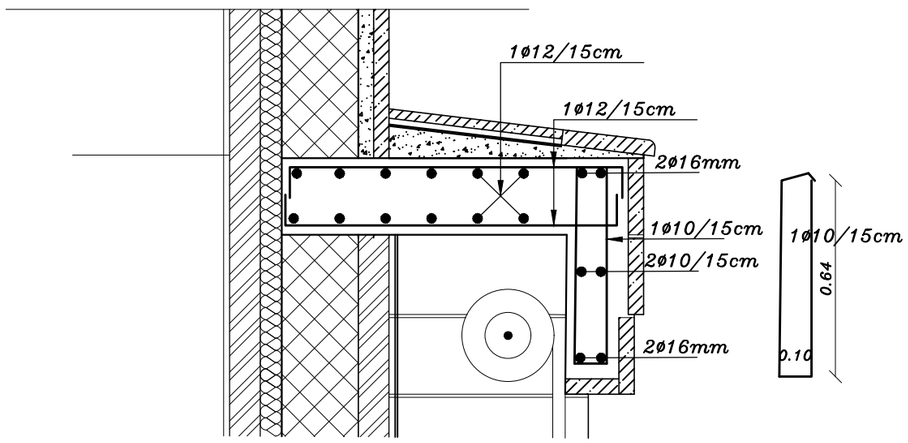

TYPICAL SECTION IN DRINKING FOUNTAIN CANOPY

SCALE 1:20

ISSUED FOR TENDERING

NOTES:–

- ALL DIMENSIONS ARE IN M.UNLESS NOTED OTHERWISE
- ALL LEVELS ARE IN M. UNLESS NOTED OTHERWISE
- DO NOT SCALE FROM DRAWINGS.

STRUCTURAL NOTES:–

1– Allowable Bearing Pressure =3.5 kg/cm2 for isolated footing & 3.0 kg/cm2 for strip footing
Foundation Depth as shown in details.
2– Foundation designed for 4 floors
3– Use concrete :–
- B 300 for columns, column neck
- B 300 for foundations, slabs, shear & retaining walls and stairs.
- B 300 for slabs on grade.
- B 300 for balding stone walls and fence walls.
- B200 for blinding.

4– Concrete cover as follows:–
- 50mm for footings.
- 50mm for columns & ground beams below grade.
- 25mm for walls, columns, beams, and slabs.

5– All structural steel used is high tensile deformed bars of Fy = 4200 kg/cm2.

6– All concrete, structural steel, blocks must tested and approved by consultant.

7– All concrete members and works below finished gr. level must be insulated with two coats of bitumen.

LEGEND

SECTION NUMBER
REFERENCE SHEET NUMBER

DETAIL NUMBER
REFERENCE SHEET NUMBER

FLOOR FINISH LEVEL
FLOOR CONCRETE LEVEL.

LEVEL SIGN IN PLAN

WINDOW NUMBER
REFERENCE SHEET NUMBER

DOOR NUMBER
REFERENCE SHEET NUMBER

RC CONCRETE FOR COL.
RC CONCRETE FOR WALLS
CONCRETE
STONE WALL
HOLLOW BLOCKS
INSOLATION MATERIAL

REVISIONS

No.	DESCRIPTION	DATE

OWNER: STATE OF PALESTINE

MINISTRY OF EDUCATION
D.G. BUILDINGS

PROJECT NO: 2501/2025

CONTRACTING AUTHORITY:

Enabel
ENABEL
Belgian Development Agency

FUNDED BY:

Belgium
partner in development

PROJECT NAME:

Public works contract for the
'Construction of Al-Bakri Green Girls' School
In Hebron
Navision Code: PSE22001-10075

SHEET NAME:

PROTOTYPE STRUCTURAL DETAILS
FOR EXTERNAL WORKS (6)

LOCATION:
City: HEBRON GOVERNATE: HEBRON
BLOCK: 34425 PLOT NO:232 QUARTER/ LOCATION: AL-SHAABA

JOINT VENTURE

iproplan® Planungsgesellschaft mbH
Consulting Engineers and Architects

Modar Consulting Engineers
REGISTRATION No. 02
HEBRON - PALESTINE
TEL: 02-2950330 / 0599-9145 FAX: 02-2950157
E-mail: modar@modar-consulting.com P.O.BOX 3330

DESIGNED	Mohammad al bada		SCALE	
CHECKED	Maysa abdelfattah		DATE	AUGUST 2025
APPROVED	Khaled Muhanna		DRG. No.	SD–26
DRAWN	AUTO CAD			

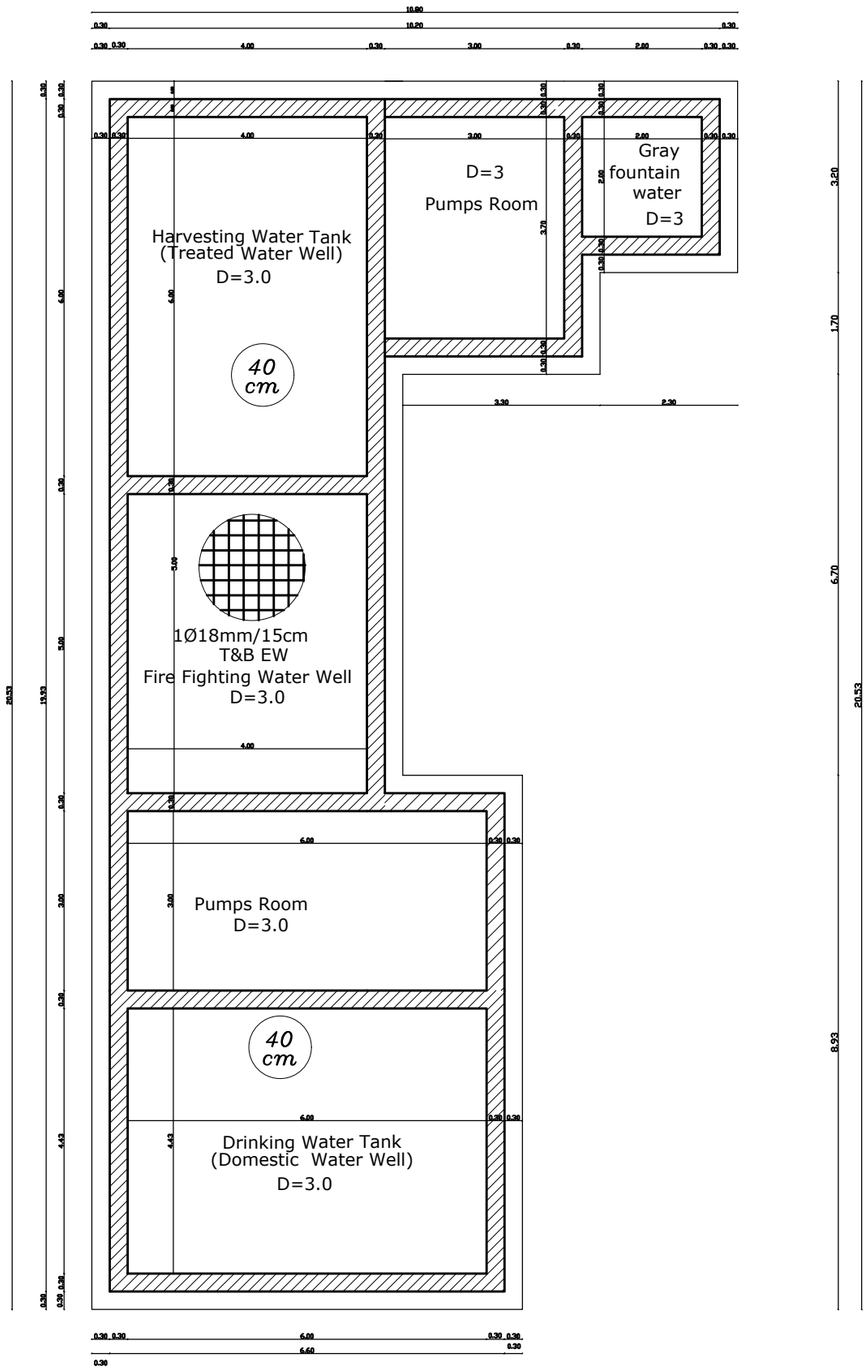

WATER TANKS LAYOUT
SCALE 1:25

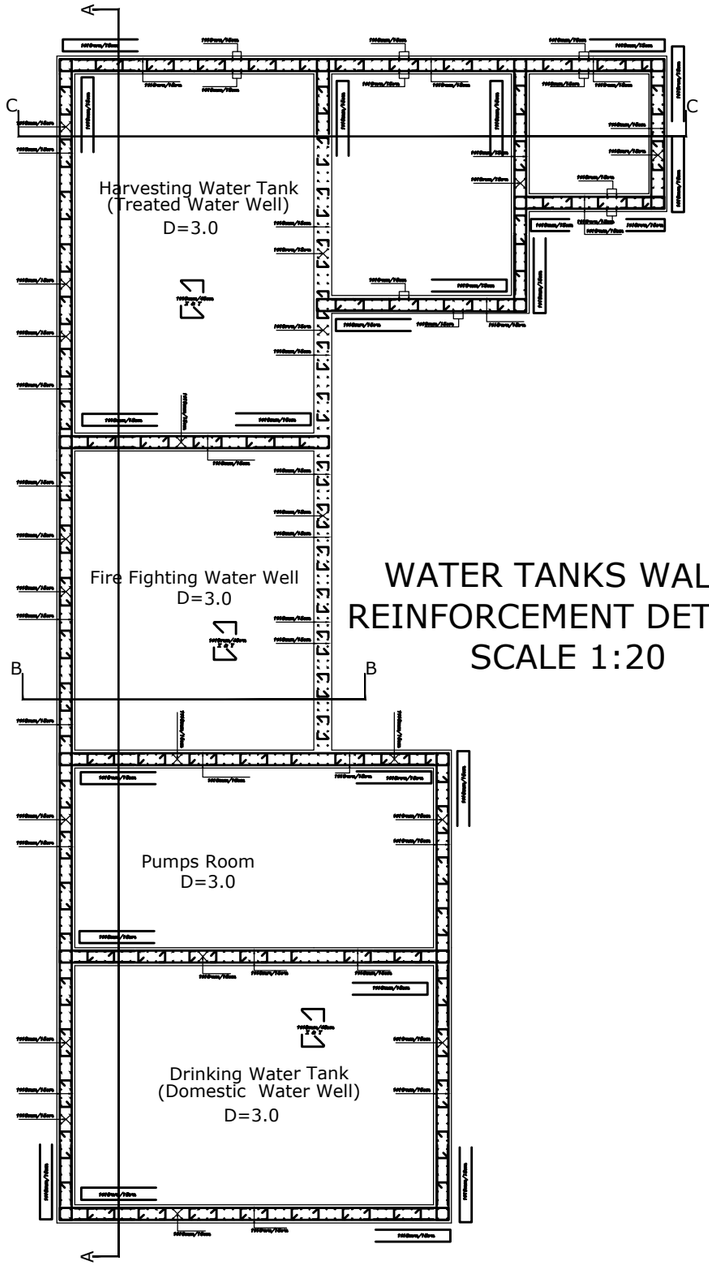

WATER TANKS WALLS
REINFORCEMENT DETAILS
SCALE 1:20

ISSUED FOR TENDERING

NOTES:–

- ALL DIMENSIONS ARE IN M.UNLESS NOTED OTHERWISE
- ALL LEVELS ARE IN M. UNLESS NOTED OTHERWISE
- DO NOT SCALE FROM DRAWINGS.

STRUCTURAL NOTES:–

1- Allowable Bearing Pressure =3.5 kg/cm2 for isolated footing & 3.5 kg/cm2 for strip footing
Foundation Depth as shown in details.
2- Foundation designed for 4 floors
3- Use concrete :–
- B 300 for columns, column neck
- B 300 for foundations, slabs, shear & retaining walls and stairs.
- B 300 for slabs on grade.
- B 300 for baking stone walls and fence walls.
- B200 for blinding.

4- Concrete cover as follows:–
- 50mm for footings.
- 50mm for columns & ground beams below grade.
- 25mm for walls, columns, beams, and slabs.

5- All structural steel used is high tensile deformed bars of Fy = 4200 kg/cm2.

6- All concrete, structural steel, blocks must tested and approved by consultant.

7- All concrete members and works below finished gr. level must be insulated with two coats of bitumen.

LEGEND

SECTION NUMBER
REFERENCE SHEET NUMBER

DETAIL NUMBER
REFERENCE SHEET NUMBER

FLOOR FINISH LEVEL
FLOOR CONCRETE LEVEL

LEVEL SIGN IN PLAN

WINDOW NUMBER
REFERENCE SHEET NUMBER

DOOR NUMBER
REFERENCE SHEET NUMBER

RC CONCRETE FOR COL.
RC CONCRETE FOR WALLS
CONCRETE
STONE WALL
HOLLOW BLOCKS
INSULATION MATERIAL

REVISIONS

No.	DESCRIPTION	DATE

OWNER:
STATE OF PALESTINE
MINISTRY OF EDUCATION
D.G. BUILDINGS

PROJECT NO: 2501/2025

CONTRACTING AUTHORITY:
Enabel
ENABEL
Belgian Development Agency

FUNDED BY:
Belgium
partner in development

PROJECT NAME:
Public works contract for the 'Construction of Al-Bakri Green Girls' School In Hebron
Navision Code: PSE22001-10075

SHEET NAME:
WATER TANKS LAYOUT

LOCATION:
City: HEBRON — GOVERNATE: HEBRON
BLOCK: 34425 — PLOT NO:232 — QUARTER/ LOCATION: AL-SHAABA

JOINT VENTURE
iproplan® Planungsgesellschaft mbH
Consulting Engineers and Architects
Consulting Engineers
REGISTRATION No. 52
AL-BIREH - PALESTINE
TEL 02-2406302 FAX 02-2406157
E-mail: madar@madar-consulting.com P.O.BOX 3559

DESIGNED	Mohammad al bada		SCALE	1:25
CHECKED	Maysa abdelfattah		DATE	AUGUST 2025
APPROVED	Khaled Muhanna		DRG. No.	SD–27
DRAWN	AUTO CAD			

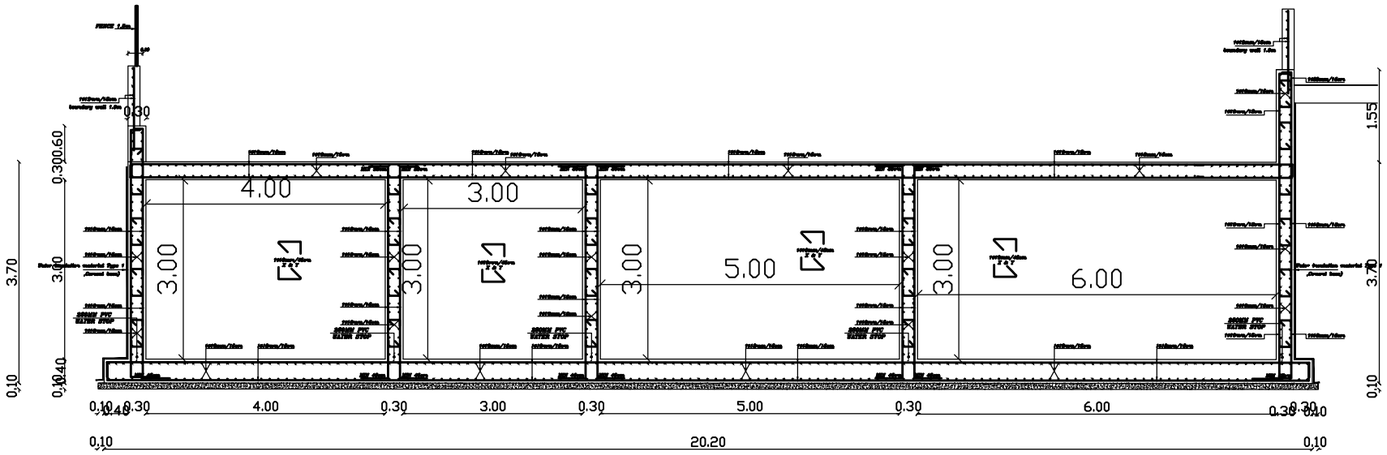

SECTION A-A IN WATER TANKS
SCALE 1:25

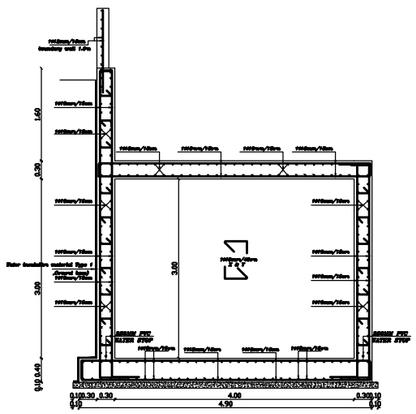

SECTION B-B IN WATER TANKS
SCALE 1:25

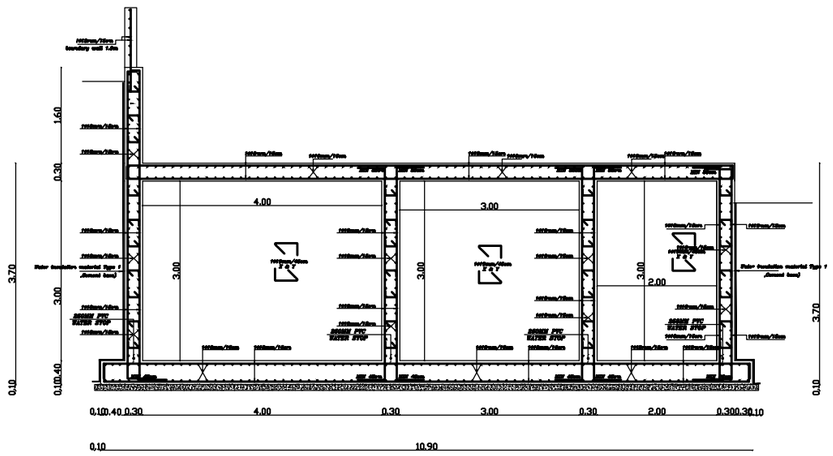

SECTION C-C IN WATER TANKS
SCALE 1:25

ISSUED FOR TENDERING

NOTES:–

- ALL DIMENSIONS ARE IN M.UNLESS NOTED OTHERWISE
- ALL LEVELS ARE IN M. UNLESS NOTED OTHERWISE
- DO NOT SCALE FROM DRAWINGS.

STRUCTURAL NOTES:–

1- Allowable Bearing Pressure =3.5 kg/cm2 for isolated footing & 3.5 kg/cm2 for strip footing
Foundation Depth as shown in details.
2- Foundation designed for 4 floors
3- Use concrete :–
- B 300 for columns, column neck
- B 300 for foundations, slabs, shear & retaining walls and stairs.
- B 300 for slabs on grade.
- B 300 for baking stone walls and fence walls.
- B200 for blinding.

4- Concrete cover as follows:–
- 50mm for footings.
- 50mm for columns & ground beams below grade.
- 25mm for walls, columns, beams, and slabs.

5- All structural steel used is high tensile deformed bars of Fy = 4200 kg/cm2.

6- All concrete, structural steel, blocks must tested and approved by consultant.

7- All concrete members and works below finished gr. level must be insulated with two coats of bitumen.

LEGEND

SECTION NUMBER
REFERENCE SHEET NUMBER

DETAIL NUMBER
REFERENCE SHEET NUMBER

FLOOR FINISH LEVEL
FLOOR CONCRETE LEVEL

LEVEL SIGN IN PLAN

WINDOW NUMBER
REFERENCE SHEET NUMBER

DOOR NUMBER
REFERENCE SHEET NUMBER

RC CONCRETE FOR COL
RC CONCRETE FOR WALLS
CONCRETE
STONE WALL
HOLLOW BLOCKS
INSULATION MATERIAL

REVISIONS

No.	DESCRIPTION	DATE

OWNER: STATE OF PALESTINE
MINISTRY OF EDUCATION
D.G. BUILDINGS

PROJECT NO: 2501/2025

CONTRACTING AUTHORITY:
Enabel
ENABEL
Belgian Development Agency

FUNDED BY:
Belgium
partner in development

PROJECT NAME:
Public works contract for the 'Construction of Al-Bakri Green Girls' School In Hebron
Navision Code: PSE22001-10075

SHEET NAME:
WATER TANKS
WALLS REINFORCEMENT

LOCATION:
City: HEBRON GOVERNATE: HEBRON
BLOCK: 34425 PLOT NO:232 QUARTER/ LOCATION: AL-SHAABA

JOINT VENTURE
iproplan Planungsgesellschaft mbH Consulting Engineers and Architects
Consulting Engineers
REGISTRATION No. 42
AL-BIREH - PALESTINE
TEL 02-2952602 - 2952145 FAX 02-2406157
E-mail: madar@madar-consulting.com P.O.BOX 3559

DESIGNED	Mohammad al bada		SCALE	1:25
CHECKED	Maysa abdelfattah		DATE	AUGUST 2025
APPROVED	Khaled Muhanna		DRG. No.	SD–28
DRAWN	AUTO CAD			

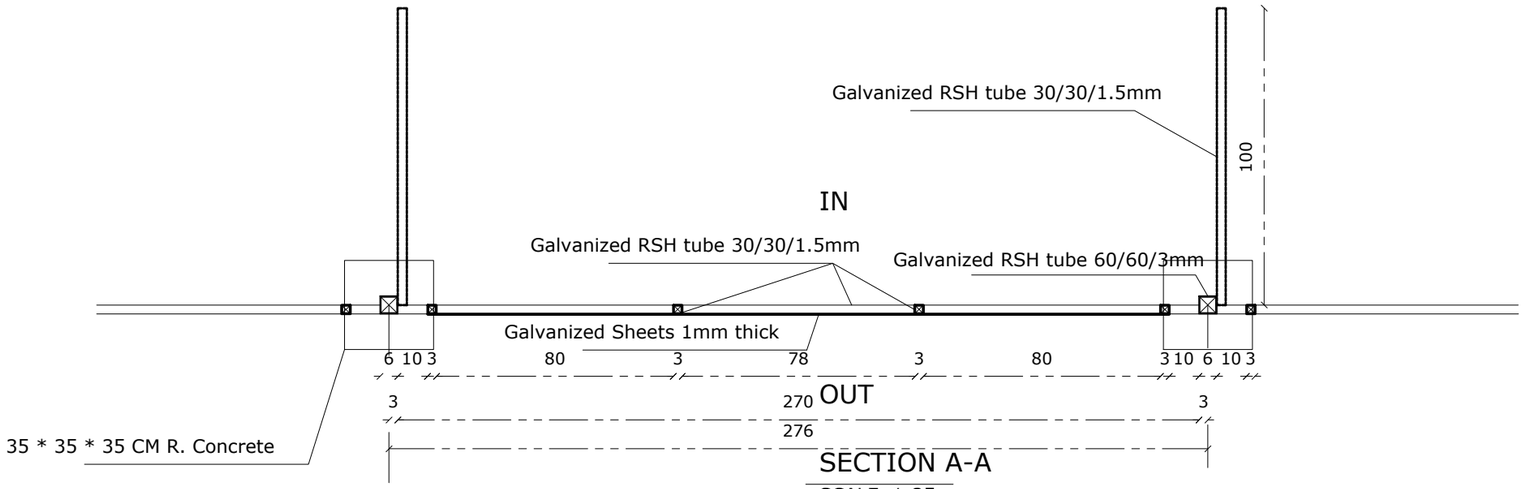

SECTION A-A

SCALE 1:25

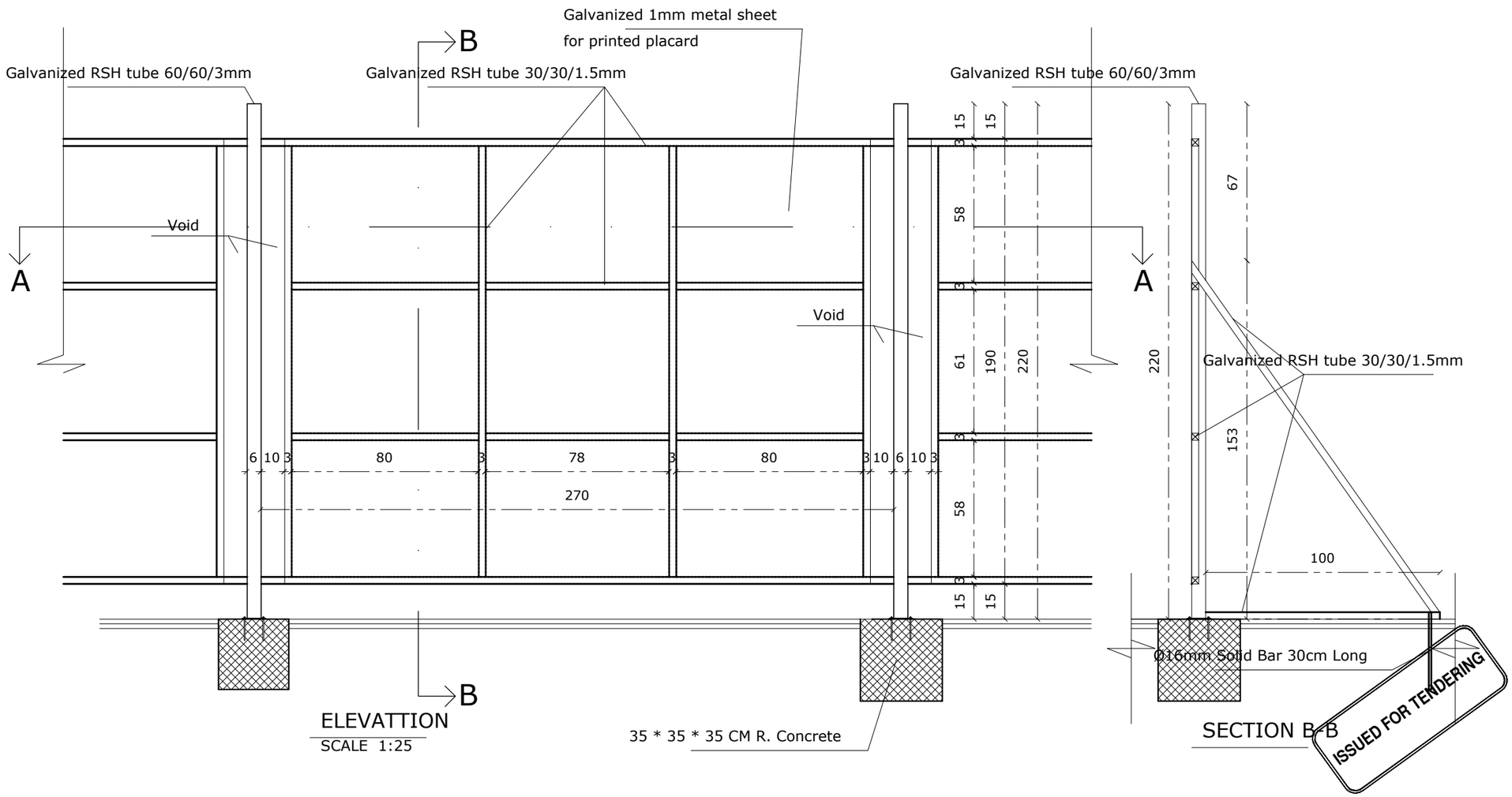

ELEVATTION

SCALE 1:25

SECTION B-B

NOTES:–

- ALL DIMENSIONS ARE IN M.UNLESS NOTED OTHERWISE
- ALL LEVELS ARE IN M. UNLESS NOTED OTHERWISE
- DO NOT SCALE FROM DRAWINGS.

STRUCTURAL NOTES:–

1- Allowable Bearing Pressure =3.5 kg/cm2 for isolated footing & 3.5 kg/cm2 for strip footing
Foundation Depth as shown in details.
2- Foundation designed for 4 floors
3- Use concrete :–
- B 300 for columns, column neck
- B 300 for foundations, slabs, shear & retaining walls and stairs.
- B 300 for slabs on grade.
- B 300 for baking stone walls and fence walls.
- B200 for blinding.

4- Concrete cover as follows:–
- 50mm for footings.
- 50mm for columns & ground beams below grade.
- 25mm for walls, columns, beams, and slabs.

5- All structural steel used is high tensile deformed bars of Fy = 4200 kg/cm2.

6- All concrete, structural steel, blocks must tested and approved by consultant.

7- All concrete members and works below finished gr. level must be insulated with two coats of bitumen.

LEGEND

SECTION NUMBER
REFERENCE SHEET NUMBER

DETAIL NUMBER
REFERENCE SHEET NUMBER

FLOOR FINISH LEVEL
FLOOR CONCRETE LEVEL

LEVEL SIGN IN PLAN

WINDOW NUMBER
REFERENCE SHEET NUMBER

DOOR NUMBER
REFERENCE SHEET NUMBER

RC CONCRETE FOR COL.
RC CONCRETE FOR WALLS
CONCRETE
STONE WALL
HOLLOW BLOCKS
INSOLATION MATERIAL

REVISIONS

No.	DESCRIPTION	DATE

OWNER: STATE OF PALESTINE

MINISTRY OF EDUCATION
D.G. BUILDINGS

PROJECT NO: 2501/2025

CONTRACTING AUTHORITY:
Enabel
ENABEL
Belgian Development Agency

FUNDED BY:
Belgium
partner in development

PROJECT NAME:
Public works contract for the 'Construction of Al-Bakri Green Girls' School In Hebron
Navision Code: PSE22001-10075

SHEET NAME:
PROTECTIVE FENCE DETAILS I

LOCATION:
City: HEBRON GOVERNATE: HEBRON
BLOCK: 34425 PLOT NO:232 QUARTER/ LOCATION: AL-SHAABA

JOINT VENTURE

iproplan® Planungsgesellschaft mbH
Consulting Engineers and Architects

Consulting Engineers
REGISTRATION No. 02
AL-BIREH - PALESTINE
TEL: 02-2406502 / 2406145 FAX: 02-2406157
E-mail: medad@medad-consulting.com P.O.BOX 3050

DESIGNED	Mohammad al badd		SCALE	N.T.S
CHECKED	Maysa abdelfattah		DATE	AUGUST 2025
APPROVED	Khaled Muhanna		DRG. No.	SD–29
DRAWN	AUTO CAD			

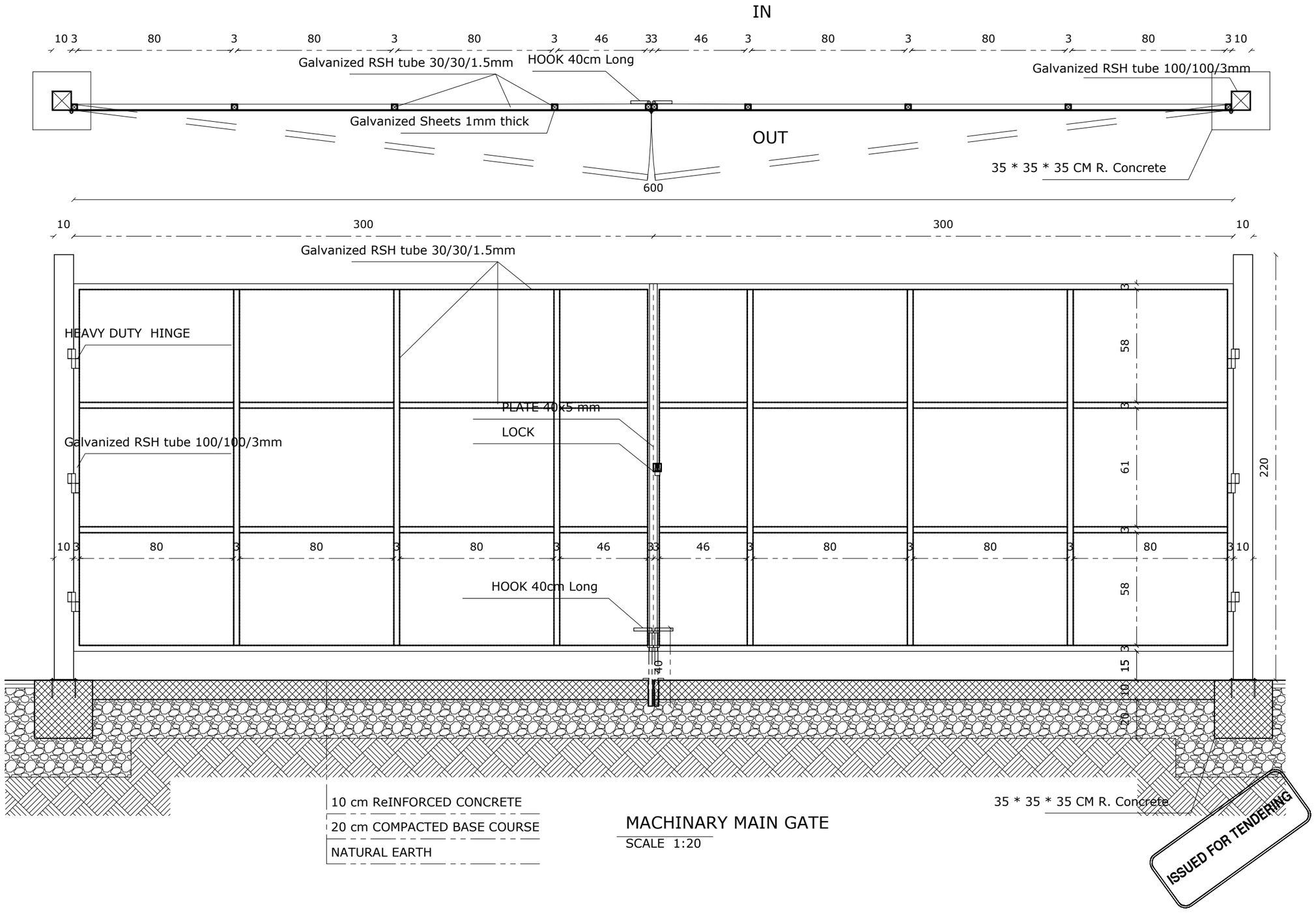

MACHINARY MAIN GATE

SCALE 1:20

NOTES:–

- ALL DIMENSIONS ARE IN M.UNLESS NOTED OTHERWISE
- ALL LEVELS ARE IN M. UNLESS NOTED OTHERWISE
- DO NOT SCALE FROM DRAWINGS.

STRUCTURAL NOTES:–

1- Allowable Bearing Pressure =3.5 kg/cm2 for isolated footing & 3.5 kg/cm2 for strip footing
Foundation Depth as shown in details.
2- Foundation designed for 4 floors
3- Use concrete :–
- B 300 for columns, column neck
- B 300 for foundations, slabs, shear & retaining walls and stairs.
- B 300 for slabs on grade.
- B 300 for baking stone walls and fence walls.
- B200 for blinding.
4- Concrete cover as follows:–
- 50mm for footings.
- 50mm for columns & ground beams below grade.
- 25mm for walls, columns, beams, and slabs.
5- All structural steel used is high tensile deformed bars of Fy = 4200 kg/cm2.
6- All concrete, structural steel, blocks must tested and approved by consultant.
7- All concrete members and works below finished gr. level must be insulated with two coats of bitumen.

LEGEND

SECTION NUMBER
REFERENCE SHEET NUMBER

DETAIL NUMBER
REFERENCE SHEET NUMBER

FLOOR FINISH LEVEL
FLOOR CONCRETE LEVEL

LEVEL SIGN IN PLAN

WINDOW NUMBER
REFERENCE SHEET NUMBER

DOOR NUMBER
REFERENCE SHEET NUMBER

RC CONCRETE FOR COL.
RC CONCRETE FOR WALLS
CONCRETE
STONE WALL
HOLLOW BLOCKS
INSOLATION MATERIAL

REVISIONS

No.	DESCRIPTION	DATE

OWNER: STATE OF PALESTINE

MINISTRY OF EDUCATION
D.G. BUILDINGS

PROJECT NO: 2501/2025

CONTRACTING AUTHORITY:

Enabel
ENABEL
Belgian Development Agency

FUNDED BY:

Belgium
partner in development

PROJECT NAME:

Public works contract for the 'Construction of Al-Bakri Green Girls' School In Hebron

Navision Code: PSE22001-10075

SHEET NAME:

PROTECTIVE FENCE DETAILS II

LOCATION:
City: HEBRON
BLOCK: 34425 PLOT NO:232
GOVERNATE: HEBRON
QUARTER/ LOCATION: AL-SHAABA

JOINT VENTURE

iproplan
Planungsgesellschaft mbH
Consulting Engineers Architects

Consulting Engineers
AL-BIREH - PALESTINE
TEL 02-2406569 / 2406148 FAX 02-2406157
E-mail: medar@medar-consulting.com P.O.BOX 3550

DESIGNED	Mohammad al bada		SCALE	N.T.S
CHECKED	Maysa abdelfattah		DATE	AUGUST 2025
APPROVED	Khaled Muhanna		DRG. No.	SD–30
DRAWN	AUTO CAD			

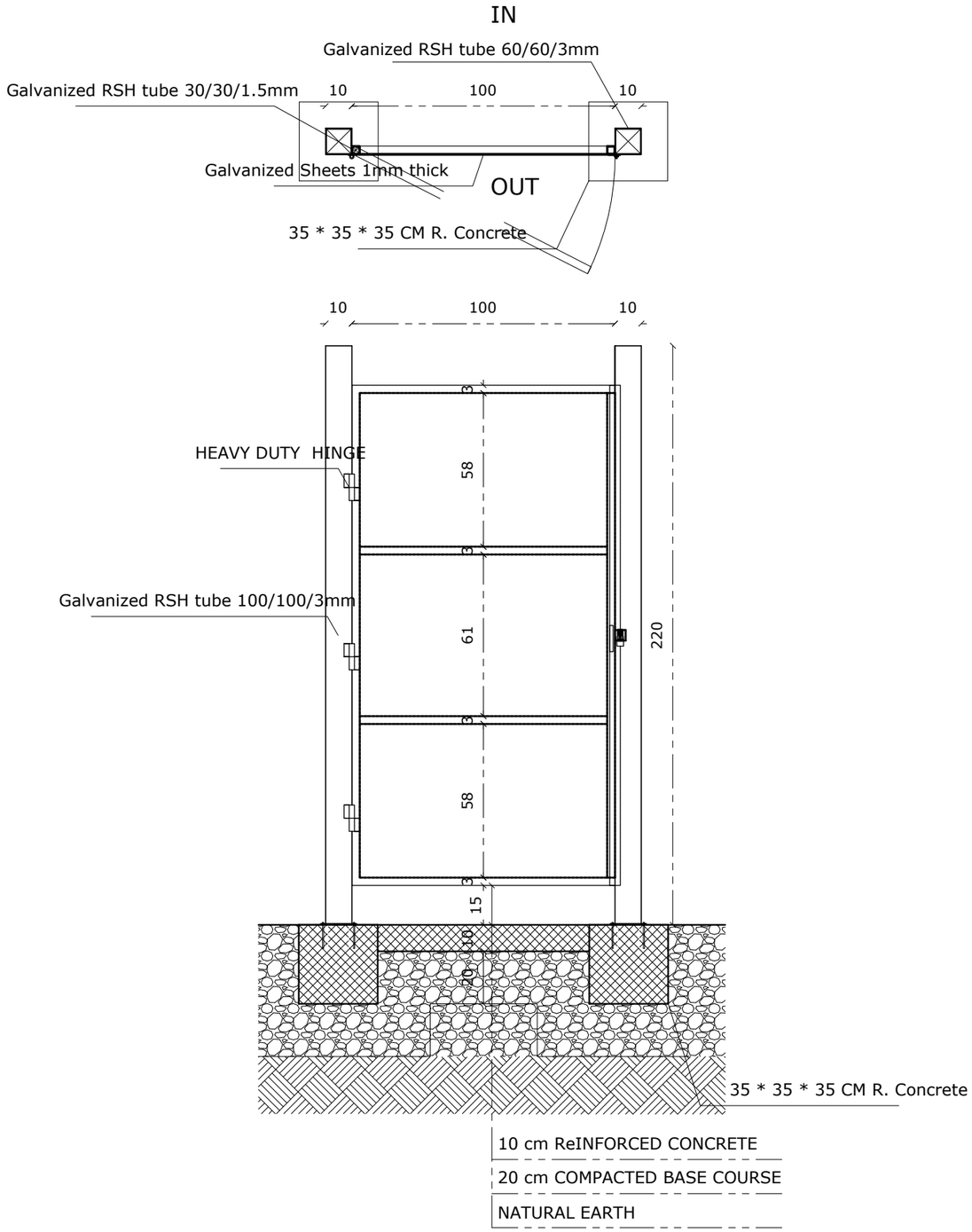

WORKERS GATE

SCALE 1:20

ISSUED FOR TENDERING

NOTES:–

- ALL DIMENSIONS ARE IN M.UNLESS NOTED OTHERWISE
- ALL LEVELS ARE IN M. UNLESS NOTED OTHERWISE
- DO NOT SCALE FROM DRAWINGS.

STRUCTURAL NOTES:–

1- Allowable Bearing Pressure =3.5 kg/cm2 for isolated footing & 3.5 kg/cm2 for strip footing
Foundation Depth as shown in details.
2- Foundation designed for 4 floors
3- Use concrete :–
- B 300 for columns, column neck
- B 300 for foundations, slabs, shear & retaining walls and stairs.
- B 300 for slabs on grade.
- B 300 for baking stone walls and fence walls.
- B200 for blinding.
4- Concrete cover as follows:–
- 50mm for footings.
- 50mm for columns & ground beams below grade.
- 25mm for walls, columns, beams, and slabs.
5- All structural steel used is high tensile deformed bars of Fy = 4200 kg/cm2.
6- All concrete, structural steel, blocks must tested and approved by consultant.
7- All concrete members and works below finished gr. level must be insulated with two coats of bitumen.

LEGEND

SECTION NUMBER
REFERENCE SHEET NUMBER

DETAIL NUMBER
REFERENCE SHEET NUMBER

FLOOR FINISH LEVEL
FLOOR CONCRETE LEVEL

LEVEL SIGN IN PLAN

WINDOW NUMBER
REFERENCE SHEET NUMBER

DOOR NUMBER
REFERENCE SHEET NUMBER

RC CONCRETE FOR COL.
RC CONCRETE FOR WALLS
CONCRETE
STONE WALL
HOLLOW BLOCKS
INSOLATION MATERIAL

REVISIONS

No.	DESCRIPTION	DATE

OWNER: STATE OF PALESTINE
MINISTRY OF EDUCATION
D.G. BUILDINGS

PROJECT NO: 2501/2025

CONTRACTING AUTHORITY:
Enabel
ENABEL
Belgian Development Agency

FUNDED BY:
Belgium
partner in development

PROJECT NAME:
Public works contract for the 'Construction of Al-Bakri Green Girls' School In Hebron
Navision Code: PSE22001-10075

SHEET NAME:
PROTECTIVE FENCE DETAILS III

LOCATION:
City: HEBRON GOVERNATE: HEBRON
BLOCK: 34425 PLOT NO:232 QUARTER/ LOCATION: AL-SHAABA

JOINT VENTURE
iproplan® Planungsgesellschaft mbH Consulting Engineers and Architects
Consulting Engineers
REGISTRATION No. 02
AL-BIREH - PALESTINE
TEL: 02-2406502 / 2406145 FAX: 02-2406157
E-mail: medad@medad-consulting.com P.O.BOX 3050

DESIGNED	Mohammad al badd		SCALE	N.T.S
CHECKED	Maysa abdelfattah		DATE	AUGUST 2025
APPROVED	Khaled Muhanna		DRG. No.	SD–31
DRAWN	AUTO CAD			

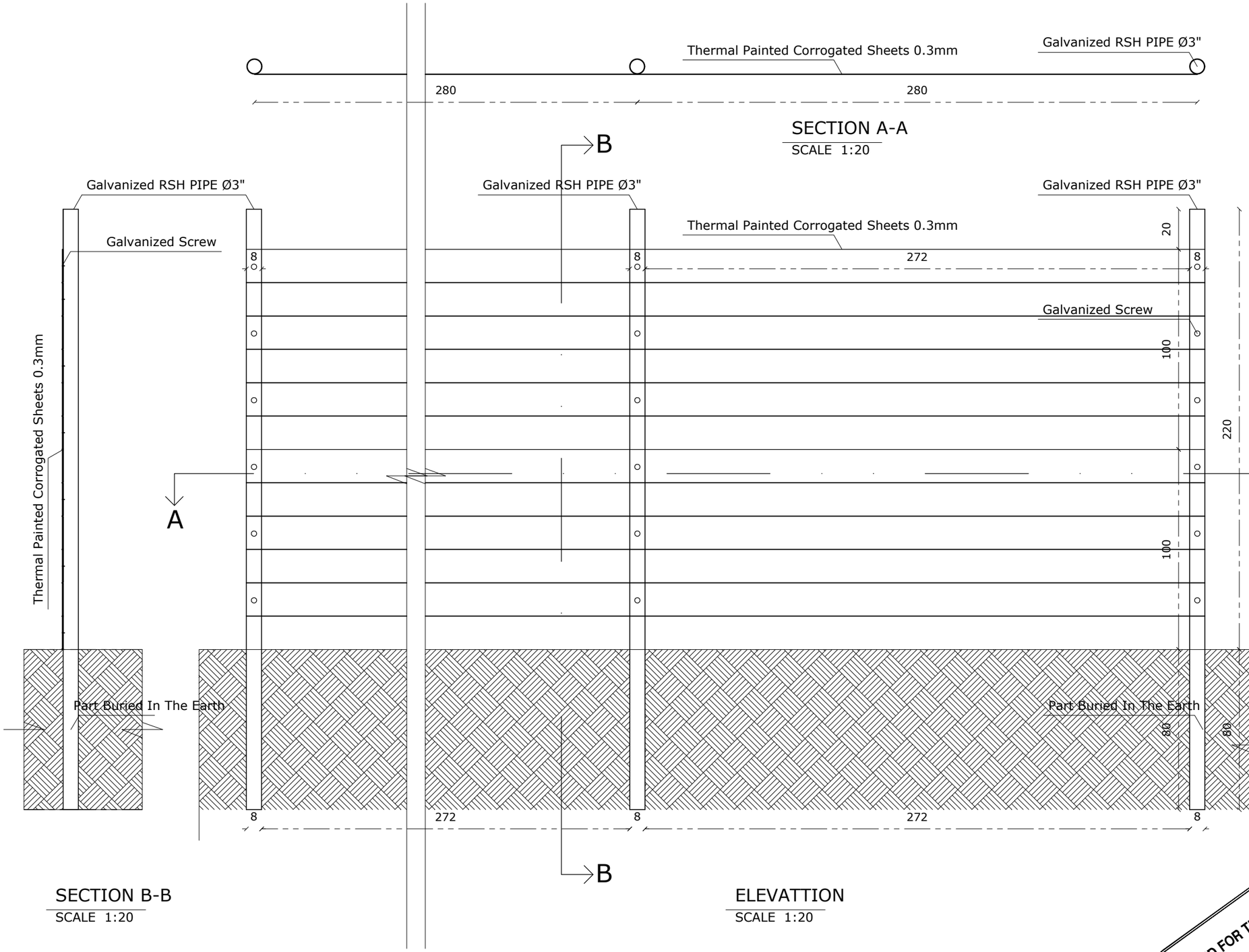

ISSUED FOR TENDERING

NOTES:–

- ALL DIMENSIONS ARE IN M.UNLESS NOTED OTHERWISE
- ALL LEVELS ARE IN M. UNLESS NOTED OTHERWISE
- DO NOT SCALE FROM DRAWINGS.

STRUCTURAL NOTES:–

1- Allowable Bearing Pressure =3.5 kg/cm2 for isolated footing & 3.5 kg/cm2 for strip footing
Foundation Depth as shown in details.
2- Foundation designed for 4 floors
3- Use concrete :–
- B 300 for columns, column neck
- B 300 for foundations, slabs, shear & retaining walls and stairs.
- B 300 for slabs on grade.
- B 300 for baking stone walls and fence walls.
- B200 for blinding.
4- Concrete cover as follows:–
- 50mm for footings.
- 50mm for columns & ground beams below grade.
- 25mm for walls, columns, beams, and slabs.
5- All structural steel used is high tensile deformed bars of Fy = 4200 kg/cm2.
6- All concrete, structural steel, blocks must tested and approved by consultant.
7- All concrete members and works below finished gr. level must be insulated with two coats of bitumen.

LEGEND

SECTION NUMBER
REFERENCE SHEET NUMBER

DETAIL NUMBER
REFERENCE SHEET NUMBER

FLOOR FINISH LEVEL
FLOOR CONCRETE LEVEL

LEVEL SIGN IN PLAN

WINDOW NUMBER
REFERENCE SHEET NUMBER

DOOR NUMBER
REFERENCE SHEET NUMBER

RC CONCRETE FOR COL.
RC CONCRETE FOR WALLS
CONCRETE
STONE WALL
HOLLOW BLOCKS
INSOLATION MATERIAL

REVISIONS

No.	DESCRIPTION	DATE

OWNER: STATE OF PALESTINE
MINISTRY OF EDUCATION
D.G. BUILDINGS

PROJECT NO: 2501/2025

CONTRACTING AUTHORITY:
ENABEL
Belgian Development Agency

FUNDED BY:
Belgium
partner in development

PROJECT NAME:
Public works contract for the 'Construction of Al-Bakri Green Girls' School In Hebron
Navision Code: PSE22001-10075

SHEET NAME:
PROTECTIVE FENCE DETAILS IV

LOCATION:
City: HEBRON
BLOCK: 34425 PLOT NO:232
GOVERNATE: HEBRON
QUARTER/ LOCATION: AL-SHAABA

JOINT VENTURE
iproplan® Planungsgesellschaft mbH Consulting Engineers and Architects
Modaqa Consulting Engineers
REGISTRATION No. 10
HEBRON - PALESTINE
TEL: 02-2050330 - 0599 - 000 - 000 FAX: 02-2050357
E-mail: modaqa@modaqa-consulting.com P.O.BOX 3550

DESIGNED	Mohammad al bada		SCALE	N.T.S
CHECKED	Maysa abdelfattah		DATE	AUGUST 2025
APPROVED	Khaled Muhanna		DRG. No.	SD–32
DRAWN	AUTO CAD			

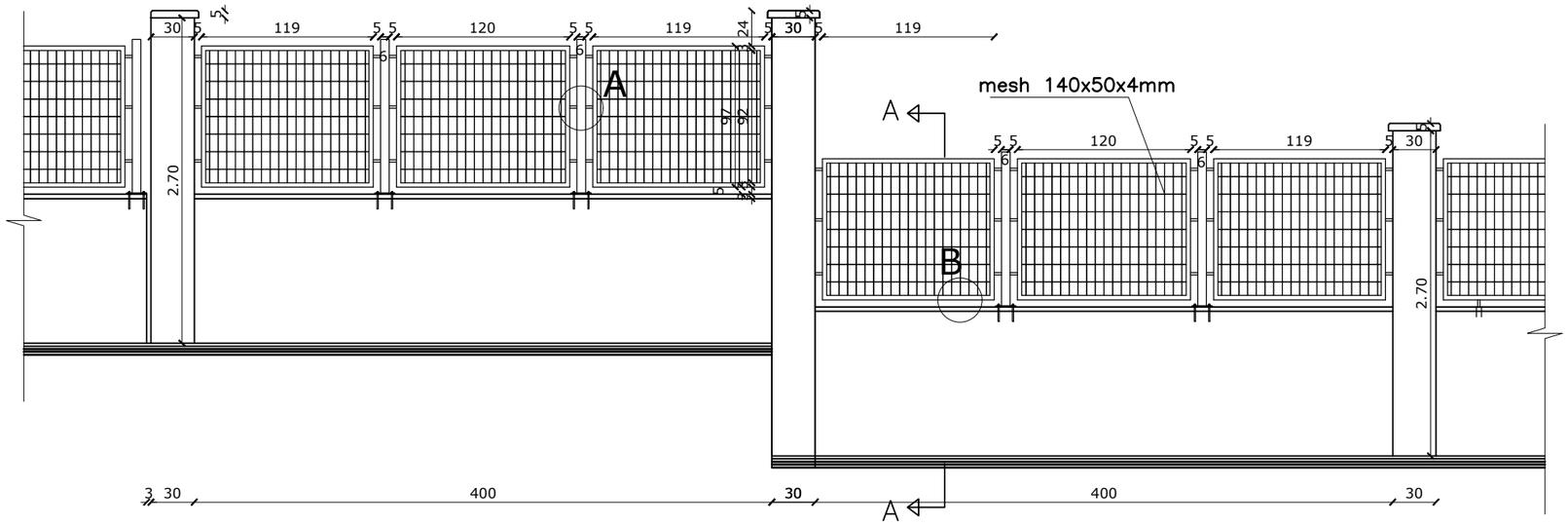

ELEVATION

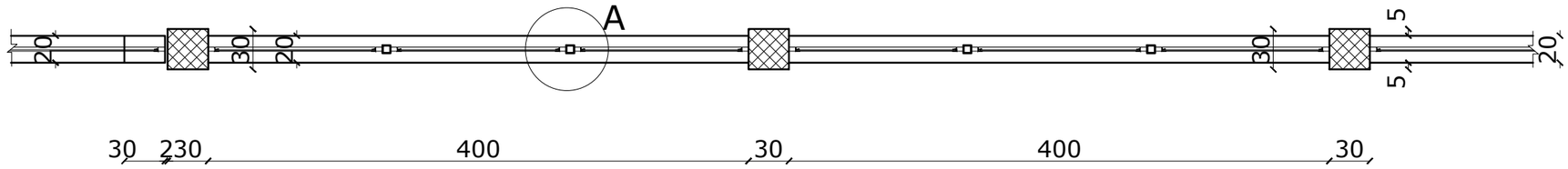

PLAN

SCALE 1:50

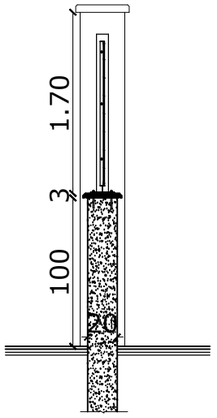

SECTION A-A

ISSUED FOR TENDERING

NOTES:–

- ALL DIMENSIONS ARE IN M.UNLESS NOTED OTHERWISE
- ALL LEVELS ARE IN M. UNLESS NOTED OTHERWISE
- DO NOT SCALE FROM DRAWINGS.

STRUCTURAL NOTES:–

1- Allowable Bearing Pressure =3.5 kg/cm2 for isolated footing & 3.5 kg/cm2 for strip footing
Foundation Depth as shown in details.
2- Foundation designed for 4 floors
3- Use concrete :–
- B 300 for columns, column neck
- B 300 for foundations, slabs, shear & retaining walls and stairs.
- B 300 for slabs on grade.
- B 300 for baking stone walls and fence walls.
- B200 for blinding.

4- Concrete cover as follows:–
- 50mm for footings.
- 50mm for columns & ground beams below grade.
- 25mm for walls, columns, beams, and slabs.

5- All structural steel used is high tensile deformed bars of Fy = 4200 kg/cm2.

6- All concrete, structural steel, blocks must tested and approved by consultant.

7- All concrete members and works below finished gr. level must be insulated with two coats of bitumen.

LEGEND

SECTION NUMBER
REFERENCE SHEET NUMBER

DETAIL NUMBER
REFERENCE SHEET NUMBER

FLOOR FINISH LEVEL
FLOOR CONCRETE LEVEL

LEVEL SIGN IN PLAN

WINDOW NUMBER
REFERENCE SHEET NUMBER

DOOR NUMBER
REFERENCE SHEET NUMBER

RC CONCRETE FOR COL.
RC CONCRETE FOR WALLS
CONCRETE
STONE WALL
HOLLOW BLOCKS
INSOLATION MATERIAL

REVISIONS

No.	DESCRIPTION	DATE

OWNER: STATE OF PALESTINE
MINISTRY OF EDUCATION
D.G. BUILDINGS

PROJECT NO: 2501/2025

CONTRACTING AUTHORITY:
Enabel
ENABEL
Belgian Development Agency

FUNDED BY:
Belgium
partner in development

PROJECT NAME:
Public works contract for the 'Construction of Al-Bakri Green Girls' School In Hebron
Navision Code: PSE22001-10075

SHEET NAME:
FENCE WALL DETAILS

LOCATION:
City: HEBRON
BLOCK: 34425 PLOT NO:232
GOVERNATE: HEBRON
QUARTER/ LOCATION: AL-SHAABA

JOINT VENTURE
iproplan® Planungsgesellschaft mbH Consulting Engineers And Architects
Consulting Engineers
REGISTRATION No. 02
HEBRON - PALESTINE
TEL 02-2950330 / 0597-000-000 FAX 02-2950357
E-mail: mader@mader-consulting.com P.O.BOX 3559

DESIGNED	Mohammad al bada		SCALE	N.T.S
CHECKED	Maysa abdelfattah		DATE	AUGUST 2025
APPROVED	Khaled Muhanna		DRG. No.	SD–33
DRAWN	AUTO CAD			

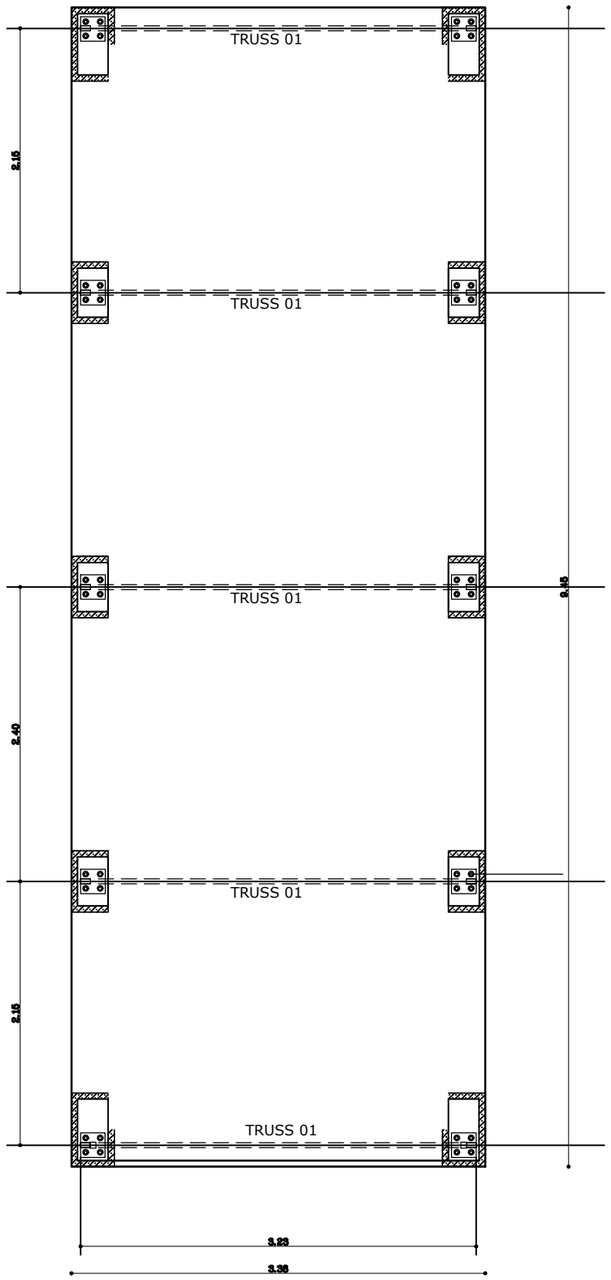

MAIN TRUSS PLAN

Scale 1:50

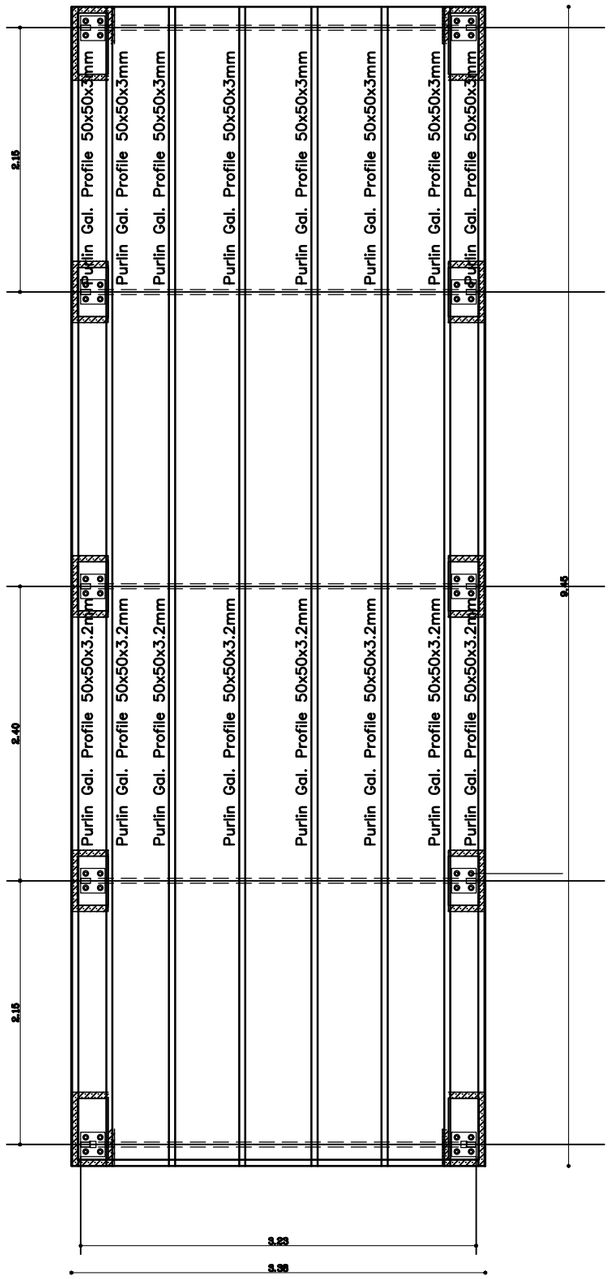

PURLING PLAN

Scale 1:50

ISSUED FOR TENDERING

NOTES:–

- ALL DIMENSIONS ARE IN M.UNLESS NOTED OTHERWISE
- ALL LEVELS ARE IN M. UNLESS NOTED OTHERWISE
- DO NOT SCALE FROM DRAWINGS.

STRUCTURAL NOTES:–

1- Allowable Bearing Pressure =3.5 kg/cm2 for isolated footing & 3.5 kg/cm2 for strip footing
Foundation Depth as shown in details.
2- Foundation designed for 4 floors
3- Use concrete :-
- B 300 for columns, column neck
- B 300 for foundations, slabs, shear & retaining walls and stairs.
- B 300 for slabs on grade.
- B 300 for baking stone walls and fence walls.
- B200 for blinding.
4- Concrete cover as follows:-
- 50mm for footings.
- 50mm for columns & ground beams below grade.
- 25mm for walls, columns, beams, and slabs.
5- All structural steel used is high tensile deformed bars of Fy = 4200 kg/cm2.
6- All concrete, structural steel, blocks must tested and approved by consultant.
7- All concrete members and works below finished gr. level must be insulated with two coats of bitumen.

LEGEND

SECTION NUMBER
REFERENCE SHEET NUMBER

DETAIL NUMBER
REFERENCE SHEET NUMBER

FLOOR FINISH LEVEL
FLOOR CONCRETE LEVEL

LEVEL SIGN IN PLAN

WINDOW NUMBER
REFERENCE SHEET NUMBER

DOOR NUMBER
REFERENCE SHEET NUMBER

RC CONCRETE FOR COL.
RC CONCRETE FOR WALLS
CONCRETE
STONE WALL
HOLLOW BLOCKS
INSOLATION MATERIAL

REVISIONS

No.	DESCRIPTION	DATE

OWNER:
STATE OF PALESTINE
MINISTRY OF EDUCATION
D.G. BUILDINGS

PROJECT NO: 2501/2025

CONTRACTING AUTHORITY:
Enabel
ENABEL
Belgian Development Agency

FUNDED BY:
Belgium
partner in development

PROJECT NAME:
Public works contract for the 'Construction of Al-Bakri Green Girls' School In Hebron
Navision Code: PSE22001-10075

SHEET NAME:
SKY LIGHT DETAILS (1)

LOCATION:
City: HEBRON
BLOCK: 34425 PLOT NO:232 GOVERNATE: HEBRON
QUARTER/ LOCATION: AL-SHAABA

JOINT VENTURE
iproplan® Planungsgesellschaft mbH
Consulting Engineers Architects
Consulting Engineers Jaber & Partners
PALESTINE TOWER No. 52
RAMALLAH - PALESTINE
TEL 02-2950202 / 2950203 FAX 02-2950207
E-mail: [illegible] P.O.BOX 2055

DESIGNED	Mohammad al bada		SCALE	1:100
CHECKED	Maysa abdellattah		DATE	AUGUST 2025
APPROVED	Khaled Muhanna		DWG. No.	SD-34
DRAWN	AUTO CAD			

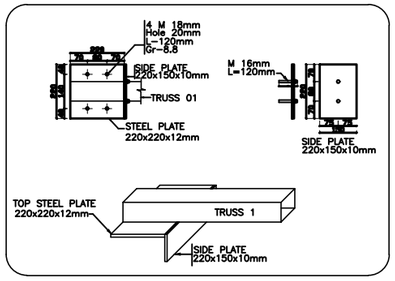

DET 01
Scale 1:25

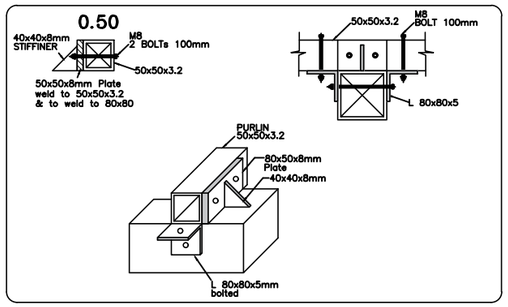

DET 02
Scale 1:25

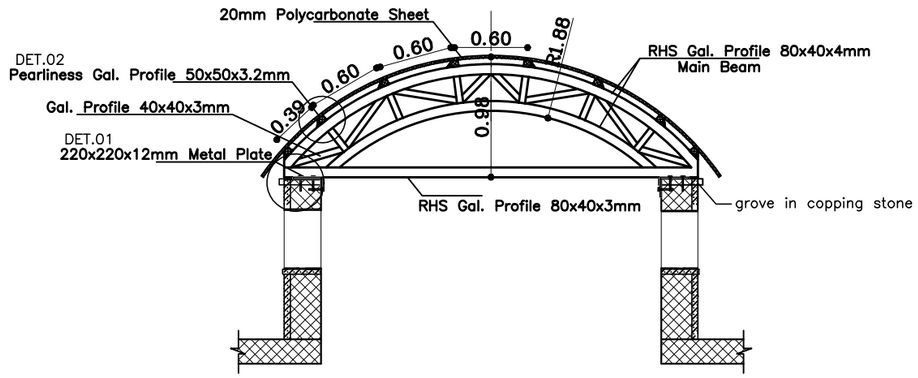

TRUSS 01
SECTION A-A
Scale 1:50

ISSUED FOR TENDERING

NOTES:–

- ALL DIMENSIONS ARE IN M.UNLESS NOTED OTHERWISE
- ALL LEVELS ARE IN M. UNLESS NOTED OTHERWISE
- DO NOT SCALE FROM DRAWINGS.

STRUCTURAL NOTES:–

1– Allowable Bearing Pressure =3.5 kg/cm2 for isolated footing & 3.5 kg/cm2 for strip footing
Foundation Depth as shown in details.
2– Foundation designed for 4 floors
3– Use concrete :–
- B 300 for columns, column neck
- B 300 for foundations, slabs, shear & retaining walls and stairs.
- B 300 for slabs on grade.
- B 300 for baking stone walls and fence walls.
- B200 for blinding.

4– Concrete cover as follows:–
- 50mm for footings.
- 50mm for columns & ground beams below grade.
- 25mm for walls, columns, beams, and slabs.

5– All structural steel used is high tensile deformed bars of Fy = 4200 kg/cm2.

6– All concrete, structural steel, blocks must tested and approved by consultant.

7– All concrete members and works below finished gr. level must be insulated with two coats of bitumen.

LEGEND

SECTION NUMBER
REFERENCE SHEET NUMBER

DETAIL NUMBER
REFERENCE SHEET NUMBER

FLOOR FINISH LEVEL
FLOOR CONCRETE LEVEL

LEVEL SIGN IN PLAN

WINDOW NUMBER
REFERENCE SHEET NUMBER

DOOR NUMBER
REFERENCE SHEET NUMBER

RC CONCRETE FOR COL.
RC CONCRETE FOR WALLS
CONCRETE
STONE WALL
HOLLOW BLOCKS
INSOLATION MATERIAL

REVISIONS

No.	DESCRIPTION	DATE

OWNER:
STATE OF PALESTINE
MINISTRY OF EDUCATION
D.G. BUILDINGS

PROJECT NO: 2501/2025

CONTRACTING AUTHORITY:
Enabel
ENABEL
Belgian Development Agency

FUNDED BY:
Belgium
partner in development

PROJECT NAME:
Public works contract for the
'Construction of Al-Bakri Green Girls' School
In Hebron
Navision Code: PSE22001-10075

SHEET NAME:
SKY LIGHT DETAILS (2)

LOCATION:
City: HEBRON
BLOCK: 34435 PLOT NO:232
GOVERNATE: HEBRON
QUARTER/ LOCATION: AL-SHAABA

JOINT VENTURE
iproplan
Planungsgesellschaft mbH
Consulting Engineers And Architects
Consulting Engineers
INVESTIGATION No. 02
PALESTINE - PALESTINE
TEL 02-2950202 / 2950140 FAX 02-2950027
E-mail: modar@modar-consulting.ems P.O.BOX 2020

DESIGNED	Mohammad al bada		SCALE	1:100
CHECKED	Maysa abdelfattah		DATE	AUGUST 2025
APPROVED	Khaled Muhanna		DRC. No.	SD–35
DRAWN	AUTO CAD			